化工部法兰式蝶阀
HG Flange Butterfly Valve

主要连接尺寸 Main connection dimensions

化工部 HG 20592-2009 单位Unit:mm

通径 Diameter (mm)	主要尺寸 Main Dimension				0.6MPa					1.0MPa					1.6MPa				
	L1	L2	H	H1	D	D1	D2	Z-Φd	bxf	D	D1	D2	Z-Φd	bxf	D	D1	D2	Z-Φd	bxf
D343H/F、D643H/F、D943H/F																			
50	108	150	275	200	140	110	90	4-Φ14	14x2	165	125	102	4-Φ18	18x2	165	125	102	4-Φ18	18x2
65	112	170	303	210	160	130	110	4-Φ14	14x2	185	145	122	8*-Φ18	18x2	185	145	122	8*-Φ18	18x2
80	114	180	324	226	190	150	128	4-Φ18	16x2	200	160	138	8-Φ18	20x2	200	160	138	8-Φ18	20x2
100	127	190	380	250	210	170	148	4-Φ18	16x2	220	180	158	8-Φ18	20x2	220	180	158	8-Φ18	20x2
125	140	200	460	295	240	200	178	8-Φ18	18x2	250	210	188	8-Φ18	22x2	250	210	188	8-Φ18	22x2
150	140	210	490	315	265	225	202	8-Φ18	18x2	285	240	212	8-Φ22	22x2	285	240	212	8-Φ22	22x2
200	152	230	600	380	320	280	258	8-Φ18	20x2	340	295	268	8-Φ22	24x2	340	295	268	12-Φ22	24x2
250	165	250	655	405	375	335	312	12-Φ18	22x2	395	350	320	12-Φ22	26x2	405	355	320	12-Φ26	26x2
300	178	270	780	480	440	395	365	12-Φ22	22x2	445	400	370	12-Φ22	26x2	460	410	378	12-Φ26	28x2
350	190	290	875	545	490	445	415	12-Φ22	22x2	505	460	430	16-Φ22	26x2	520	470	438	16-Φ26	30x2
400	216	310	910	550	540	495	465	16-Φ22	22x2	565	515	482	16-Φ26	26x2	580	525	490	16-Φ30	32x2
450	222	330	1000	620	595	550	520	16-Φ22	22x2	615	565	532	20-Φ26	28x2	640	585	550	20-Φ30	40x2
500	229	350	1090	680	645	600	570	20-Φ22	24x2	670	620	585	20-Φ26	28x2	715	650	610	20-Φ33	44x2
600	267	390	1210	750	755	705	670	20-Φ26	30x2	780	725	685	20-Φ30	34x2	840	770	725	20-Φ36	54x2
700	292	430	1350	820	860	810	775	24-Φ26	24x5	895	840	800	24-Φ30	34x5	910	840	795	24-Φ36	42x5
800	318	470	1520	910	975	920	880	24-Φ30	24x5	1015	950	905	24-Φ33	36x5	1025	950	900	24-Φ39	42x5
900	330	510	1570	930	1075	1020	980	24-Φ30	26x5	1115	1050	1005	28-Φ33	38x5	1125	1050	1000	28-Φ39	44x5
1000	410	550	1700	980	1175	1120	1080	28-Φ30	26x5	1230	1160	1110	28-Φ36	38x5	1255	1170	1115	28-Φ42	46x5
1200	470	630	2040	1220	1405	1340	1295	32-Φ33	28x5	1455	1380	1330	32-Φ39	44x5	1485	1390	1330	32-Φ48	52x5
1400	530	710	2240	1310	1630	1560	1510	36-Φ36	32x5	1675	1590	1535	36-Φ42	48x5	1685	1590	1530	36-Φ48	58x5
1600	600	790	2440	1460	1830	1760	1710	40-Φ36	34x5	1915	1820	1760	40-Φ48	52x5	1930	1820	1750	40-Φ56	64x5
1800	670	870	2650	1560	2045	1970	1920	44-Φ39	36x5	2115	2020	1960	44-Φ48	56x5	2130	2020	1950	44-Φ56	68x5
2000	760	950	2860	1670	2265	2180	2125	48-Φ42	38x5	2325	2230	2170	48-Φ48	60x5	2345	2230	2150	48-Φ62	70x5

通径 Diameter (mm)	2.5MPa					4.0MPa					6.3MPa					10.0MPa				
	D	D1	D2	Z-Φd	bxf	D	D1	D2	Z-Φd	bxf	D	D1	D2	Z-Φd	bxf	D	D1	D2	Z-Φd	bxf
50	165	125	102	4-Φ18	20x2	165	125	102	4-Φ18	20x2	180	135	102	4-Φ22	26x2	195	145	102	4-Φ26	30x2
65	185	145	122	8-Φ18	22x2	185	145	122	8-Φ18	22x2	205	160	122	8-Φ22	26x2	220	170	122	8-Φ26	34x2
80	200	160	138	8-Φ18	24x2	200	160	138	8-Φ18	24x2	215	170	138	8-Φ22	28x2	230	180	138	8-Φ26	36x2
100	235	190	162	8-Φ22	24x2	235	190	162	8-Φ22	24x2	250	200	162	8-Φ26	30x2	265	210	162	8-Φ30	40x2
125	270	220	188	8-Φ26	26x2	270	220	188	8-Φ26	26x2	295	240	188	8-Φ30	34x2	315	250	188	8-Φ33	40x2
150	300	250	218	8-Φ26	28x2	300	250	218	8-Φ26	28x2	345	280	218	8-Φ33	36x2	355	290	218	12-Φ33	44x2
200	360	310	278	12-Φ26	30x2	375	320	285	12-Φ30	34x2	415	345	285	12-Φ36	42x2	430	360	285	12-Φ36	52x2
250	425	370	335	12-Φ30	32x2	450	385	345	12-Φ33	38x2	470	400	345	12-Φ36	46x2	505	430	345	12-Φ39	60x2
300	485	430	395	16-Φ30	34x2	515	450	410	16-Φ33	42x2	530	460	410	16-Φ36	52x2	585	500	410	16-Φ42	68x2
350	555	490	450	16-Φ33	38x2	580	510	465	16-Φ36	46x2	600	525	465	16-Φ39	56x2	655	560	465	16-Φ48	74x2
400	620	550	505	16-Φ36	40x2	660	585	535	16-Φ39	50x2	670	585	535	16-Φ42	60x2	715	620	535	16-Φ48	78x2
450	670	600	555	20-Φ36	46x2	685	610	560	20-Φ39	57x2	–	–	–	–	–	–	–	–	–	–
500	730	660	615	20-Φ36	48x2	755	670	615	20-Φ42	57x2	–	–	–		–	–	–	–	–	–
600	845	770	720	20-Φ39	58x2	890	795	735	20-Φ48	72x2	–	–	–	–	–	–	–	–	–	–
700	960	675	820	24-Φ42	50x5	–	–	–	–	–	–	–	–	–	–	–	–	–	–	–
800	1085	990	930	24-Φ48	54x5	–	–	–	–	–	–	–	–	–	–	–	–	–	–	–
900	1185	1090	1030	28-Φ48	58x5	–	–	–	–	–	–	–	–	–	–	–	–	–	–	–
1000	1320	1210	1140	28-Φ55	62x5	–	–	–	–	–	–	–	–	–	–	–	–	–	–	–
1200	1530	1420	1350	32-Φ55	70x5	–	–	–	–	–	–	–	–	–	–	–	–	–	–	–
1400	1755	1640	1560	36-Φ62	76x5	–	–	–	–	–	–	–	–	–	–	–	–	–	–	–
1600	1975	1860	1780	40-Φ62	84x5	–	–	–	–	–	–	–	–	–	–	–	–	–	–	–
1800	2195	2070	1985	44-Φ70	90x5	–	–	–	–	–	–	–	–	–	–	–	–	–	–	–
2000	2425	2300	2210	48-Φ70	96x5	–	–	–	–	–	–	–	–	–	–	–	–	–	–	–

API
美标蝶阀系列
API butterfly valve series

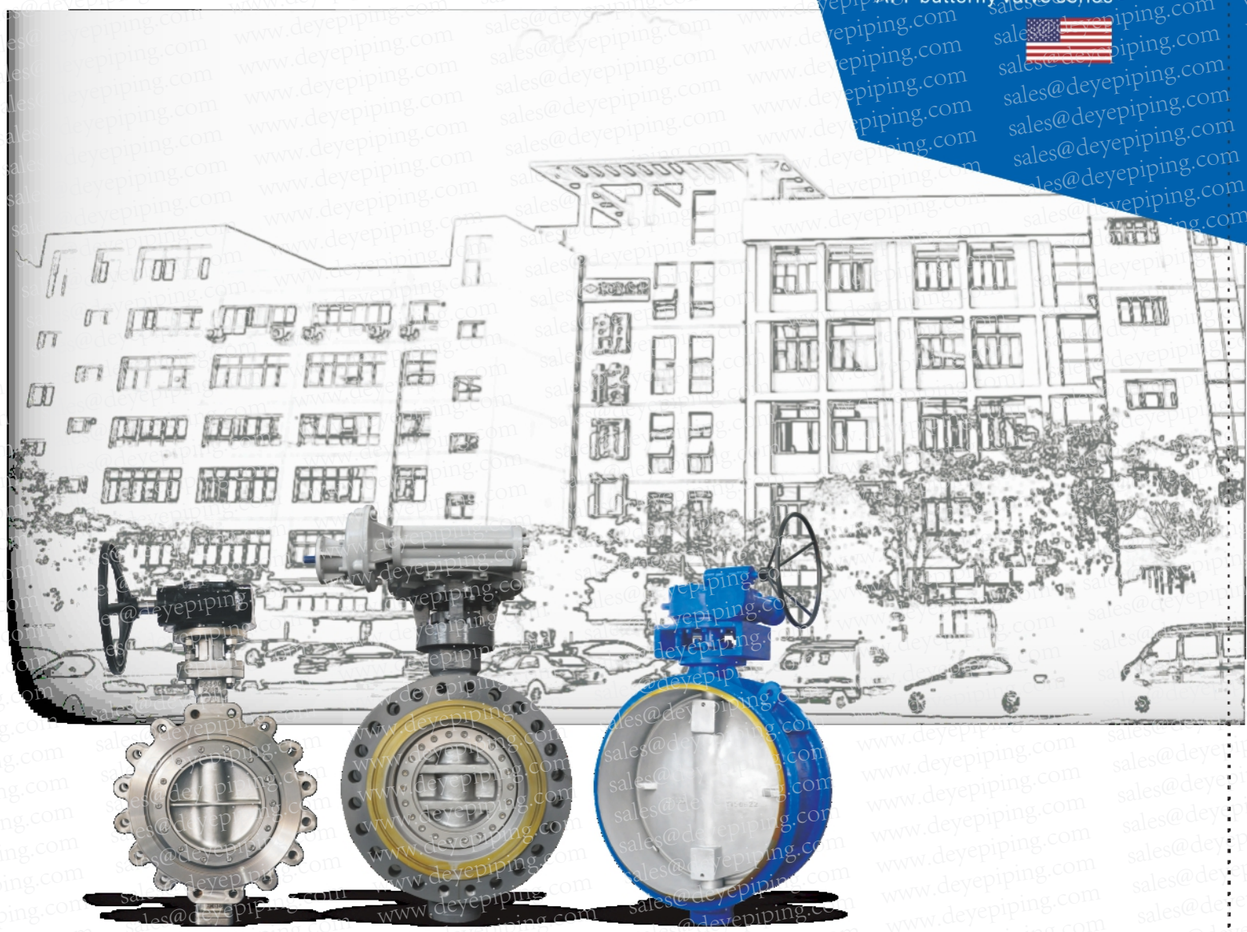

美标蝶阀密封形式
ASME Butterfly Valve Sealing Form

美标三偏心蝶阀几何图American Standard Butterfly Valve Geometric Graph

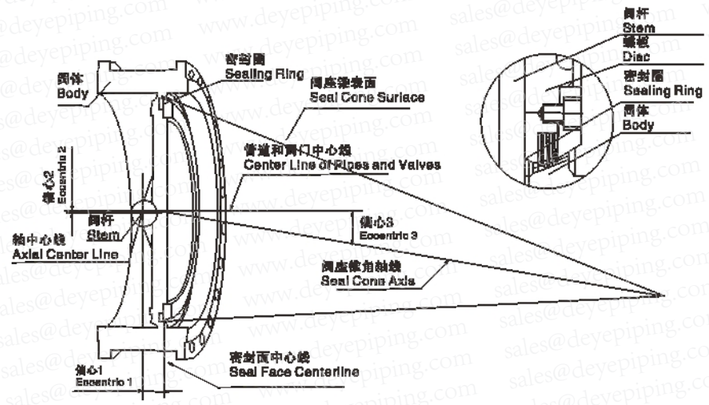

第一个偏心轴偏离密封面中心线
第二个偏心轴偏管路及阀门中心线
第三个其独特的偏心阀座斜锥角与管路中心的夹角，这样，使得阀座与密封圈在门整个开关过程中完全脱离。这种结构即利用了凸轮效应。又完全消除了摩擦，去除掉了磨损和泄露的可能。

Firstly: The eccentric shaft deflected from the center line of sealing surface.
Secondly: The eccentric shaft deflected from pipe and center line of valve.
Thirdly: The unique design of eccentric seat oblique cone and the angle of centerline, makes the seat and sealing ring completely out from the door during the open and close. This structure adopted the cam effect, completely eliminating the friction, avoiding the possibility of wear and leakage.

我公司生产的三偏心蝶阀，依靠安装在蝶板上的复合不锈钢密封圈来实现真正的零泄漏。
Our triple eccentric butterfly valve realizes zero leakage relying on the composite stainless steel sealing ring installed in the disc.

零泄漏是通过蝶板上密封圈的弹性来实现的，该密封圈的弹性(如右图)是通过其径向的压缩和柔动生产的。密封圈与阀座接触面为斜锥面。密封圈与阀座之间的接触角产生轻微的“楔式效应”使密封圈发生柔动和径向压缩。正由于阀座与密封圈之间均匀接触以及密封圈的柔性，使得加载在阀座上的载荷均匀，从而用最小的扭矩实现最严密的切断。扭矩产生的弹性使得阀门严密关断，而与介质流向或介质力无关。

Zero leakage is implemented by the elastic sealing ring mounted on the disc. The elasticity of sealing ring (see to the right picture) is produced by its radial compression and flexibility. The contact surface between the sealing ring and seat is an oblique cone. The contact angle between them gives slight "wedge effect", making the sealing ring producing flexibility and radial compression. The even contact between the seat and sealing ring, and the elasticity of sealing makes the load on the seat even, thus to perform closest cut off by the lowest torque. The elasticity produced by the torque makes the valve closely cut off, regardless of the flow direction or pressure of medium.

美标蝶阀性能、用途、特点
ASME Butterfly Valve’s Performance, Use and Characteristic

用途及特点 Purpose and Characteristic

复合金属密封圈的弹性特性使得阀门具有零泄漏性能。
扭矩密封确保阀门持续的双向零泄漏特性。
直角旋转无摩擦设计是通过一个独特的三偏心原理来实现的，它消除了90开关旋转中阀座与密封圈之间的摩擦。
STL一体式硬面阀座可满足许多工况要求，使用寿命，维修方便。
一体式铸造(板焊)阀体，结构长度符合ISO5752、ASME16.10和API609.可替换高性能蝶阀以及其他种类的阀门，安装简单、灵活全金属结构加上零泄漏性能，使阀门有具有‘本质防火安全’特性。
阀杆防吹出设计安全可靠，完全符合API609的要求。
阀杆杆上的阀位指示器以及顶部安装法兰有利于蝶板位置指示。
美标三偏心蝶阀的阀杆采用一根通轴式结构，阀杆与蝶阀连接采用键或销键组全。

Elastic property of composite metal sealing ring performs zero leakage.
Torque sealing ensures the persistent bi-directional zero leakage.
The design of right- angled rotation with zero friction is implemented by the distinctive triple eccentric principle; it eliminates the friction between the seat and sealing ring in 90° rotation.
STL one-piece hard-surface seat may adapt to many working conditions, which is featured with long service life and easy maintenance.
One-piece cast (sheet welded) body, face to face dimensions conforming to ISO05752, ASME16.10 and API609, replacement of high performance butterfly valves and other types of valves, easy and flexible installation, intrinsical fireproof property thanks to all metal structure and leak tight performance.
Anti-blowout stem designs for high dependability, completely conforming to API6109.
The valve position indicator on the stem and the flange mounted at the top of are in the favor of the indication of disc position.
The stem of American standard triple eccentric butterfly valve, is a shaft structure, stem and disc are connected by key or pin-key combination.

采用标准 Adoption Standard

设计标准 Design Standard		API 609		
法兰连接尺寸 Flange Connection Dimension		口径≤24"根据 ANSI B16.5 口径>24" 根据 ANSI B16.47 Series B Size≤24" according to ANSI B16.5,Size>24" according to ANSI B16.47 Series B		
试验和检验 Test and Inspection		API 598		
温压等级 Pressure-Temperature Rate		ASEM B16.34		
结构长度 Face to Face Dimension	短结构 Short Structure	API609.ISO5752 basic series 13		
	长结构 Long Structure	ASME B16.10		
防火制造 Fire Safe		API 607		
压力等级 Pressure Rating		150LB	300LB	600LB
常温试验压力(Mpa) Test Pressure at Room Temperature	壳体试验 Shell Test	2.93	7.58	15.0
	高压密封 High Pressure Seal Test	2.07	5.52	11.03
	低压密封 Low Pressure Seal Test	0.6	0.6	0.6
适用介质 Applicable Medium		水、油、气及各类腐蚀性介质(不同的介质选用不同的材质) Water, Oil, Gas and Other Causticity Media (Different Media Use Different Materials)		
适用温度 Applicable Temperature		-46℃~550℃(不同的工况温度选用不同的材质) (Different Raw Material for Different Work Temperature)		

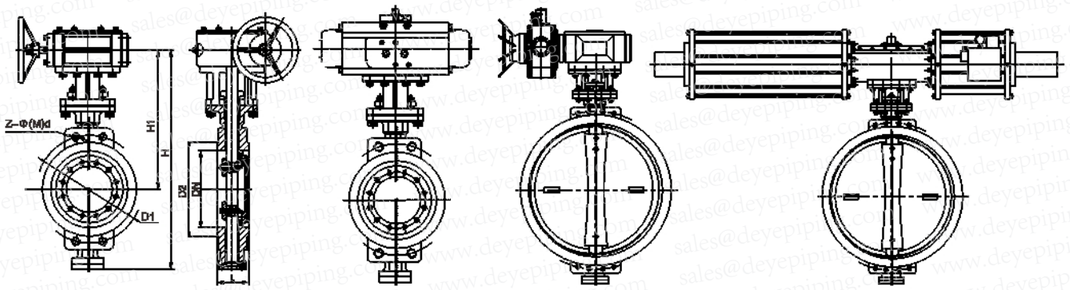

D373H　　D673H　　D973H

主要技术参数 Main Technology Parameter

公称压力 Nominal Pressure (MPa)	试验压力(MPa) Test Pressure (MPa)			适用温度 Applicable Temperature	适用介质 Applicable Medium
	壳体试验 Shell Test	高压密封 High Pressure Seal	低压密封 Low Pressure Seal		
CLASS150	2.93	2.07	0.6	-29～425℃	水、蒸汽、油品、海水等 Water,Steam,Oil,Seawater.
CLASS300	7.58	5.52	0.6		
CLASS600	15.0	11.03	0.6		
CLASS900	24.0	17.6	0.6		

主要零件材质 Material for Main Parts

零件名称Parts Name	材料 Material
阀体 Body	WCB、304、316、316SS、CF8M
蝶板 Disc	WCB、304、316、316SS、CF8M
阀杆 Stem	316、2Cr13、1Cr18Ni9Ti
密封圈 Sealing Ring	316、氟塑料Fluorine Plastic
填料 Packing	柔性石墨、氟塑料Flexible Graphite,Fluorine Plastic

美标对夹式蝶阀
ASME Wafer Butterfly Valve

主要连接尺寸 Main Connection Dimensions

ASME 16.5　ASME 16.47 B　单位：Unit: mm

通径 Diameter		150Lb						300Lb					
Inch	mm	L	H	H1	D1	D2	Z-Φ(M)d	L	H	H1	D1	D2	Z-Φ(M)d
2	50	43	300	210	120.5	92	4-19	43	330	230	127	92	4-19
3	80	49	340	230	152.5	127	4-19	49	420	270	168.5	127	4-22
4	100	54	400	265	190.5	157	4-19	54	490	305	200	157	4-22
5	125	57	480	325	216	186	4-22	57	530	345	235	186	4-22
6	150	58	530	345	241.5	216	4-22	61	590	380	270	216	4-(3/4)
8	200	64	620	395	298.5	270	4-22	73	650	410	330	270	4-(7/8)
10	250	71	680	425	362	324	4-25	83	750	470	387.5	324	4-(1)
12	300	81	800	495	432	381	4-25	92	860	545	451	381	4-(1 1/8)
14	350	92	880	555	476	413	4-29	117	940	590	514.5	413	4-(1 1/8)
16	400	102	950	590	540	470	4-(1)	133	990	640	571.5	470	4-(1 1/4)
18	450	114	1000	630	578	533	4-(1 1/8)	149	1100	690	628.5	533	4-(1 1/4)
20	500	127	1110	700	635	584	4-(1 1/8)	159	1200	740	686	584	4-(1 1/4)
24	600	154	1230	750	749.5	692	4-(1 1/4)	181	1360	850	813	692	4-(1 1/2)
28	700	165	1350	810	795.3	762	8-(3/4)	229	1430	870	857.2	787	4-(1 1/4)
32	800	190	1390	840	900.1	864	8-(3/4)	254	1570	950	977.9	902	4-(1 1/2)
36	900	203	1660	1000	1009.6	972	8-(7/8)	254	1750	1110	1089	1010	4-(1 5/8)
40	1000	216	1720	1080	1120.8	1080	8-(1)	300	1980	1200	1190.6	1114	4-(1 5/8)
48	1200	254	2080	1250	1335.1	1289	8-(1 1/8)	360	2130	1270	1416	1327	4-(1 7/8)

通径 Diameter		600Lb						900Lb					
Inch	mm	L	H	H1	D1	D2	Z-Φ(M)d	L	H	H1	D1	D2	Z-Φ(M)d
2	50	43	355	230	127	92	4-(5/8)	-	-	-	-	-	-
3	80	54	480	290	168.3	127	4-(3/4)	-	-	-	-	-	-
4	100	64	510	320	215.9	157	4-(7/8)	-	-	-	-	-	-
5	125	76	590	380	266.7	186	4-(1)	-	-	-	-	-	-
6	150	78	620	400	292.1	216	4-(1)	104	760	460	317.5	216	4-(1 1/8)
8	200	102	730	460	349.2	270	4-(1 1/8)	112	850	530	393.7	270	4-(1 3/8)
10	250	117	870	550	431.8	324	4-(1 1/4)	135	980	635	469.9	324	4-(1 3/8)
12	300	140	930	600	489	381	4-(1 1/4)	170	1050	690	533.4	381	4-(1 3/8)
14	350	155	1005	630	527	413	4-(1 3/8)	173	1130	720	558.8	413	4-(1 1/2)
16	400	178	1135	705	603.2	470	4-(1 1/2)	210	1195	740	616	470	4-(1 5/8)
18	450	200	1200	750	654	533	4-(1 5/8)	228	1340	840	685.8	533	4-(1 7/8)
20	500	216	1270	780	723.9	584	4-(1 5/8)	250	1410	865	749.3	584	4-(2)
24	600	232	1440	880	838.2	692	4-(1 7/8)	275	1645	990	901.7	692	4-(2 1/2)

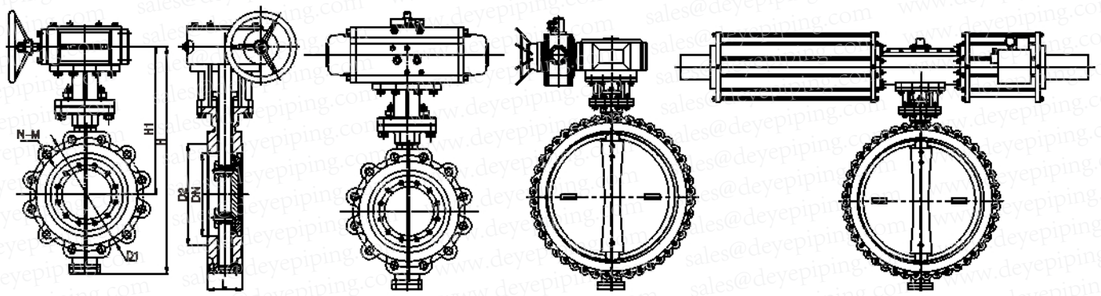

主要技术参数 Main Technology Parameter

公称压力 Nominal Pressure (MPa)	试验压力(MPa) Test Pressure (MPa)			适用温度 Applicable Temperature	适用介质 Applicable Medium
	壳体试验 Shell Test	高压密封 High Pressure Seal	低压密封 Low Pressure Seal		
CLASS150	2.93	2.07	0.6	-29～425℃	水、蒸汽、油品、海水等 Water,Steam,Oil,Seawater.
CLASS300	7.58	5.52	0.6		
CLASS600	15.0	11.03	0.6		

主要零件材质 Material for Main Parts

零件名称 Parts Name	材料 Material
阀体 Body	WCB、304、316、316SS、CF8M
蝶板 Disc	WCB、304、316、316SS、CF8M
阀杆 Stem	316、2Cr13、1Cr18Ni9Ti
密封圈 Sealing Ring	316、氟塑料Fluorine Plastic
填料 Packing	柔性石墨、氟塑料Flexible Graphite,Fluorine Plastic

美标凸耳式蝶阀
ASME Lug Butterfly Valve

主要连接尺寸 Main Connection Dimensions

ASME 16.5 ASME 16.47 B 单位：Unit: mm

通径 Diameter		150Lb						300Lb					
Inch	mm	L	H	H1	D1	D2	N-M	L	H	H1	D1	D2	N-M
2	50	43	300	210	120.5	92	4-(5/8)	43	330	230	127	92	8-(5/8)
3	80	49	340	230	152.5	127	4-(5/8)	49	420	270	188.5	127	8-(3/4)
4	100	54	400	265	190.5	157	8-(5/8)	54	490	305	200	157	8-(3/4)
5	125	57	480	325	216	186	8-(3/4)	57	530	345	235	186	8-(3/4)
6	150	58	530	345	241.5	216	8-(3/4)	61	590	380	270	218	12-(3/4)
8	200	64	620	395	298.5	270	8-(3/4)	73	650	410	330	270	12-(7/8)
10	250	71	680	425	362	324	12-(7/8)	83	750	470	387.5	324	16-(1)
12	300	81	800	495	432	381	12-(7/8)	92	860	545	451	381	16-(1 1/8)
14	350	92	880	555	476	413	12-(1)	117	940	590	514.5	413	20-(1 1/8)
16	400	102	950	590	540	470	16-(1)	133	990	640	571.5	470	20-(1 1/4)
18	450	114	1000	630	578	533	16-(1 1/8)	149	1100	690	628.5	533	24-(1 1/4)
20	500	127	1110	700	635	584	20-(1 1/8)	159	1200	740	686	584	24-(1 1/4)
24	600	154	1230	750	749.5	692	20-(1 1/4)	181	1360	850	813	692	24-(1 1/2)
28	700	165	1350	810	795.3	762	40-(3/4)	229	1430	870	857.2	787	36-(1 1/4)
32	800	190	1390	840	900.1	864	48-(3/4)	254	1570	950	977.9	902	32-(1 1/2)
36	900	203	1660	1000	1009.6	972	44-(7/8)	254	1750	1110	1089	1010	32-(1 5/8)
40	1000	216	1720	1080	1120.8	1080	44-(1)	300	1980	1200	1190.6	1114	40-(1 5/8)
48	1200	254	2080	1250	1335.1	1289	44-(1 1/8)	360	2130	1270	1416	1327	40-(1 7/8)

通径 Diameter		600Lb						900Lb					
Inch	mm	L	H	H1	D1	D2	N-M	L	H	H1	D1	D2	N-M
6	150	78	620	400	292.1	216	12-(1)	104	760	460	317.5	216	12-(1 1/8)
8	200	102	730	460	349.2	270	12-(1 1/8)	112	850	530	393.7	270	12-(1 3/8)
10	250	117	870	550	431.8	324	16-(1 1/4)	135	980	635	469.9	324	16-(1 3/8)
12	300	140	930	600	489	381	20-(1 1/4)	170	1050	690	533.4	381	20-(1 3/8)
14	350	155	1005	630	527	413	20-(1 3/8)	173	1130	720	558.8	413	20-(1 1/2)
16	400	178	1135	705	603.2	470	20-(1 1/2)	210	1195	740	616	470	20-(1 5/8)
18	450	200	1200	750	654	533	20-(1 5/8)	228	1340	840	685.8	533	20-(1 7/8)
20	500	216	1270	780	723.9	584	24-(1 5/8)	250	1410	865	749.3	584	20-(2)
24	600	232	1440	880	838.2	692	24-(1 7/8)	275	1645	990	901.7	692	20-(2 1/2)

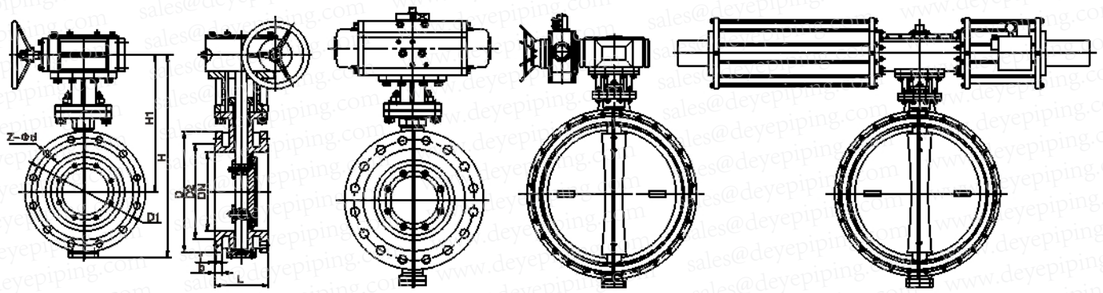

D341H D641H D941H

主要性能参数及采用标准 Main Performance Parameters and Standard

设计标准 Design Standard		API 609		
法兰连接尺寸 Flange Connection Dimension		口径≤24"根据 ANSI B16.5 口径>24" 根据 ANSI B16.47 Series B Size≤24" according to ANSI B16.5,Size>24" according to ANSI B16.47 Series B		
试验和检验 Test and Inspection		API 598		
温压等级 Temperature and Pressure Level		ASEM B16.34		
结构长度 Face to Face Dimension	短结构 Short Structure	API609.ISO5752 basic series 13		
	长结构 Long Structure	ASME B16.10		
防火制造 Fire Safe		API 607		
压力等级 Pressure Rating		150LB	300LB	600LB
常温试验压力(Mpa) Test Pressure at Room Temperature	壳体试验 Shell Test	2.93	7.58	15.0
	高压密封 High Pressure Seal	2.07	5.52	11.03
	低压密封 Low Pressure Seal	0.6	0.6	0.6
适用介质 Applicable Medium		水、油、气及各类腐蚀性介质(不同的介质选用不同的材质) Water, Oil, Gas and Other Corrosive Media (Different Media Use Different Materials)		
适用温度 Applicable Temperature		-46℃-550℃(不同的工况温度选用不同的材质) (Different Temperature Conditions Use Different Materials)		

主要零件材质 Material for main parts

零件名称Parts Name	材料 Material
阀体Body	铸铁、不锈钢、铬钼钢、合金钢 Cast iron,Stainless steel ,Cr.Mo.Steel,alloy steel
蝶板Disc	铸钢、合金钢、不锈钢、铬钼钢 Cast steel,Alloy steel,Stainless steel, Cr.Mo.Steel
密封圈Sealing Ring	不锈钢与耐高温石棉板组合成多层次Stainless steel and high temperature resistant asbestos composed of multiple layers
阀杆Stem	2Cr13、1Cr13不锈钢、铬钼钢Stainless steel,Cr.Mo.Steel
轴承Bearing	奥氏体不锈钢、304氮化ZG00CrNi10,304 nitrification
填料Packing	柔性石墨 Flexible Graphite

主要连接尺寸 Main Connection Dimensions

ASME 16.5 ASME 16.47 B 单位：Unit: mm

通径Diameter		150Lb								300Lb							
Inch	mm	L	H	H1	D	D1	D2	Z-Φd	bxf	L	H	H1	D	D1	D2	Z-Φd	bxf
2	50	108	300	210	150	120.5	92	4-19	18x2	108	385	240	165	127	92	8-19	23x2
2 1/2	65	112	320	220	180	139.5	105	4-19	20x2	112	400	250	190	149	105	8-22	26x2
3	80	114	340	230	190	152.5	127	4-19	22x2	114	410	260	210	168.5	127	8-22	29x2
4	100	127	400	265	230	190.5	157	8-19	24x2	127	420	270	255	200	157	8-22	32x2
5	125	140	480	325	255	216	186	8-22	24x2	140	530	345	280	235	186	8-22	35x2
6	150	140	530	345	280	241.5	216	8-22	26x2	140	590	380	320	270	216	12-22	37x2
8	200	152	620	395	345	298.5	270	8-22	29x2	152	650	410	380	330	270	12-26	42x2
10	250	165	680	425	405	362	324	12-25	31x2	165	750	470	445	387.5	324	16-29	48x2
12	300	178	800	495	485	432	381	12-25	32x2	178	860	545	520	451	381	16-32	51x2
14	350	190	880	555	535	476	413	12-29	35x2	190	940	590	585	514.5	413	20-32	54x2
16	400	216	950	590	595	540	470	16-29	37x2	216	990	640	650	571.5	470	20-35	58x2
18	450	222	1000	630	635	578	533	16-32	40x2	222	1100	690	710	628.5	533	24-35	61x2
20	500	229	1100	680	700	635	584	20-32	43x2	229	1200	740	755	686	584	24-35	64x2
24	600	267	1230	750	815	749.5	692	20-35	48x2	267	1360	850	915	813	692	24-41	70x2
28	700	292	1260	770	835	795.3	762	40-22	43.0x2	430	1410	980	920	857.2	787	36-36	87.4x2
30	750	318	1350	820	885	846.1	813	44-22	43.0x2	450	1495	1010	990	920.8	845	36-39	92.1x2
32	800	318	1400	850	940	900.1	864	48-22	44.6x2	470	1535	1080	1055	977.9	902	32-42	101.6x2
36	900	330	1550	930	1055	1009.6	972	44-26	50.9x2	510	1585	1110	1170	1089.0	1010	32-45	101.6x2
40	1000	410	1650	980	1175	1120.8	1080	44-30	54.1x2	550	1605	1150	1275	1190.6	1114	40-45	114.3x2
44	1100	450	1850	1100	1275	1222.4	1181	52-30	58.9x2	590	2100	1380	1385	1295.4	1219	40-48	125.5x2
48	1200	470	1950	1150	1390	1335.1	1289	44-33	63.6x2	630	2270	1410	1510	1416.0	1327	40-51	127.0x2
52	1300	470	2050	1200	1495	1436.7	1391	52-33	68.4x2	–	–	–	–	–	–	–	–
56	1400	530	2200	1400	1600	1543.0	1492	60-33	71.6x2	–	–	–	–	–	–	–	–
60	1500	530	2350	1460	1725	1662.1	1600	52-36	74.7x2	–	–	–	–	–	–	–	–

通径Diameter		600Lb								900Lb							
Inch	mm	L	H	H1	D	D1	D2	Z-Φd	bxf	L	H	H1	D	D1	D2	Z-Φd	bxf
2	50	150	355	230	165	127	92	8-19	26x7	–	–	–	–	–	–	–	–
2 1/2	65	170	430	260	190	149.2	105	8-22	29x7	–	–	–	–	–	–	–	–
3	80	180	480	290	210	168.3	127	8-22	32x7	–	–	–	–	–	–	–	–
4	100	190	510	320	275	215.9	157	8-26	38x7	–	–	–	–	–	–	–	–
5	125	200	590	380	330	266.7	186	8-29	45x7	–	–	–	–	–	–	–	–
6	150	210	620	400	355	292.1	216	12-29	48x7	250	760	460	380	317.5	216	8-32	55.6x7
8	200	230	730	460	420	349.2	270	12-32	56x7	310	850	530	470	393.7	270	8-39	63.5x7
10	250	250	870	550	510	431.8	324	16-35	64x7	350	980	635	545	469.9	324	12-39	69.9x7
12	300	270	930	600	560	489	381	20-35	67x7	380	1050	690	610	533.4	381	16-39	79.4x7
14	350	290	1005	630	605	527	413	20-39	70x7	400	1130	720	640	558.8	413	16-42	85.8x7
16	400	310	1135	705	685	603.3	470	20-42	76x7	430	1195	740	705	616	470	16-45	88.9x7
18	450	330	1200	750	745	654	533	20-45	83x7	460	1340	840	785	685.8	533	16-52	101.6x7
20	500	350	1270	780	815	723.9	584	24-45	89x7	490	1410	865	855	749.3	584	16-54	108x7
24	600	390	1440	880	940	838.2	692	24-51	102x7	530	1645	990	1040	901.7	692	16-67	139.7x7
28	700	430	1700	1065	950	863.6	784	28-48	115.9x7	–	–	–	–	–	–	–	–
32	800	470	1835	1130	1085	984.2	895	28-55	130.2x7	–	–	–	–	–	–	–	–

DIN

德标蝶阀系列

DIN butterfly valve series

德标蝶阀性能、用途、特点

DIN Butterfly Valve's Performance, Use and Characteristic

用途及特点 Purpose and Characteristic

硬密封蝶阀系列产品，是我公司新开发的长寿命、节能型蝶阀。

本产品由阀体、蝶板、密封圈、传动机构等主要部件组成。其结构采用二维或三维偏心原理设计，弹性密封和硬软多层次密封靠密的加工新工艺，使蝶阀在运行工作时，减少其扭矩力，达到省力、节能之功能。从而确保蝶阀整体的抗腐蚀、耐高温、抗磨损的可能性。其主要性能特点是：

1、结构独特、型小轻便、操作灵活、省力、方便；
2、密封可靠，可满足各级标准；
3、流量特性好，且具有调节功能；
4、采用偏心原理，使密封面近似零磨损，延长了阀门使用寿命；
5、应用范围广，可用于水、蒸气、油品、空气、煤气等介质；
6、适用不同温度及6.4MPa以下的压力等级、耐腐蚀等各种工况之管线。

Metal seated series butterfly valve is our company new product with long life and energy-saving.

This valve is composed of body, disc, seal ring, driving device and other main units. It adopts double or triple eccentric structure and resilience sealing, and soft/metal multilayer sealing. Its low torque achieves the function of saving energy when the butterfly valve is working. The ability of anti-corrosion, high temperature resistance, anti-wear is assured. Its main performance characteristics are:

1. Unique structure, light volume,smart operation, energy-saving, convenience;
2. Reliable sealing suits any standard;
3. Good flow character and adjustable function;
4. Eccentric theory is adopted to extend the valve service life and make the sealing surface almost zero wearing;
5.Widely used in various media, such as water, steam, oil, air, gas and etc.;
6. Suitable for pipelines of any working condition such as different temperature degree, pressure degrees below 6.4MPa, and corrosive medium.

用途 Purpose

本蝶阀适用于食品、医药、石油化工、电厂、钢厂、工业环保水处理及高层建筑、供排水管道上作调节流量和截断流体最佳装置。

Our butterfly valves are widely used for food, pharmacy, petroleum and chemical industry, electric plant, steel plant, industrial environmental water treatment and high building, is the best device for adjusting and cutting the flow of water supply tube.

主要性能参数及采用标准 Main Performance Parameters and Standard

设计标准Design Standard		DIN2559-2007		
法兰连接尺寸 Flange Connection Dimension		EN1092-1:2001		
结构长度Face to Face Dimension		EN558.1:1995		
压力试验Pressure Test		EN12266-1		
公称通径Nominal Diameter		50~1800		
公称压力Nominal Pressure		1.0	1.6	2.5
试验压力 Test Pressure	强度试验Shell Test	1.5	2.4	3.75
	密封试验Seal Test	1.1	1.76	2.75
	气密封试验Air Tight Test	0.5~0.7MPa		
适用介质Applicable Medium		水、油品、蒸汽、煤气、酸、碱等Water, Oil, Steam, Gas, Acid, Alkali, Etc.		
适用温度Applicable Temperature		-40℃~570℃		

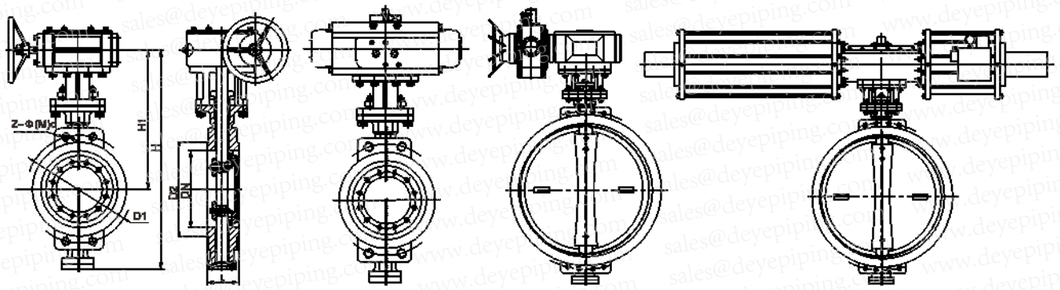

D373H　　D673H　　D973H

主要技术参数 Main Technology Parameter

公称通径 Nominal Diameter	公称压力 Nominal Pressure	试验压力(MPa) Test Pressure			渗漏率 Leakage	适用温度 Appropriate Temperatuer	适用介质 Appropriate Medium	驱动形式 Drive Modality
DN(mm)	PN(MPa)	强度试验 Shell Test	密封试验 Seal Test	气密封试验 Air Sealing Test				
50～2000	0.6	0.9	0.66	0.6	<0.1×DNmm³/s (符合GB/T13927-92标准 According to Standard GB/T13927-92	碳钢 Carbon Steel: -29℃～425℃ 不锈钢 Stainless Steel: -40℃～600℃	空气、水、蒸气、煤气、油品以及酸、碱、盐等有腐蚀性介质等 Air,Water,Steam Coal Gas,Oil and Acid,Alkali,Salt Corrosive Medium and so on.	蜗杆蜗轮传动、气传动、电传动 Lever Operator, Worm Gear Operator, Pneumatic Operator, Electric Operator
	1.0	1.5	1.1	0.6				
	1.6	2.4	1.76	0.6				
	2.5	3.75	2.75	0.6				
50～500	4.0	6.0	4.4	0.6				

主要零件材质 Material for Main Parts

零件名称Parts Name	材料 Material
阀体Body	铸铁、不锈钢、铬钼钢、合金钢 Cast iron,Stainless steel ,Cr.Mo.Steel,alloy steel
蝶板Disc	铸钢、合金钢、不锈钢、铬钼钢 Cast steel,Alloy steel,Stainless steel, Cr.Mo.Steel
密封圈Sealing Ring	不锈钢与耐高温石棉板组合成多层次Stainless steel and high temperature resistant asbestos composed of multiple layers
阀杆Stem	2Cr13、1Cr13不锈钢、铬钼钢Stainless steel,Cr.Mo.Steel
轴承Bearing	奥氏体不锈钢、304氮化ZG00CrNi10,304 nitrification
填料Packing	柔性石墨 Flexible Graphite

主要连接尺寸 Main Connection Dimensions

德标 EN1092-1单位Unit:mm

通径 Diameter (mm)	主要尺寸 Main Dimension				0.6MPa			1.0MPa			1.6MPa		
	L1	L2	H	H1	D1	D2	Z-φ(M)d	D1	D2	Z-φ(M)d	D1	D2	Z-φ(M)d
D373H/F、D673H/F、D973H/F													
50	43	43	272	200	110	90	4-14	125	102	4-18	125	102	4-18
65	46	46	335	225	130	110	4-14	145	122	4-18	145	122	4-18
80	49	64	355	240	150	128	4-18	160	138	4-18	160	138	4-18
100	56	64	385	255	170	148	4-18	180	158	4-18	180	158	4-18
125	64	70	455	305	200	178	4-18	210	188	4-18	210	188	4-18
150	70	76	490	325	225	202	4-18	240	212	4-22	240	212	4-22
200	71	89	590	380	280	258	4-18	295	268	4-22	295	268	4-22
250	76	114	655	410	335	312	4-18	350	320	4-22	355	320	4-26
300	83	114	740	460	395	365	4-22	400	370	4-22	410	378	4-26
350	92	127	840	525	445	415	4-22	460	430	4-M20	470	438	4-M24
400	102	140	890	545	495	465	4-M20	515	482	4-M24	525	490	4-M27
450	114	152	1010	630	550	520	4-M20	585	532	4-M24	585	550	4-M27
500	127	152	1065	650	600	570	4-M20	620	585	4-M24	650	610	4-M30
600	154	178	1140	680	705	670	4-M24	725	685	4-M27	770	725	4-M33
700	165	229	1268	780	810	775	4-M24	840	800	4-M27	840	795	4-M33
800	190	241	1432	860	920	880	4-M27	950	905	4-M30	950	900	4-M36
900	203	241	1528	900	1020	980	4-M27	1050	1005	4-M30	1050	1000	4-M36
1000	216	300	1698	1000	1120	1080	4-M27	1160	1110	4-M33	1170	1115	4-M39
1200	254	360	1910	1100	1340	1295	4-M30	1380	1330	4-M36	1390	1330	4-M45
1400	279	390	2140	1200	1560	1510	4-M33	1590	1535	4-M39	1590	1530	4-M45
1600	318	440	2420	1330	1760	1710	4-M33	1820	1760	4-M45	1820	1750	4-M52

通径 Diameter (mm)	主要尺寸 Main Dimension				2.5MPa			4.0MPa			6.3MPa		
	L1	L2	H	H1	D1	D2	Z-φ(M)d	D1	D2	Z-φ(M)d	D1	D2	Z-φ(M)d
50	43	43	272	200	125	102	4-18	125	102	4-18	135	102	4-22
65	46	46	335	225	145	122	4-18	145	122	4-18	160	122	4-22
80	49	64	355	240	160	138	4-18	160	138	4-18	170	138	4-22
100	56	64	385	255	190	162	4-22	190	162	4-22	200	162	4-26
125	64	70	455	305	220	188	4-26	220	188	4-26	240	188	4-30
150	70	76	490	325	250	218	4-26	250	218	4-26	280	218	4-33
200	71	89	590	380	310	278	4-26	320	285	4-M27	345	285	4-M33
250	76	114	655	410	370	335	4-30	385	345	4-M30	400	345	4-M33
300	83	114	740	460	430	395	4-M27	450	410	4-M30	460	410	4-M33
350	92	127	840	525	490	450	4-M30	510	465	4-M33	525	465	4-M36
400	102	140	890	545	550	505	4-M33	585	535	4-M36	585	535	4-M39
450	114	152	1010	630	600	555	4-M33	610	560	4-M36	–	–	–
500	127	152	1065	650	660	615	4-M33	670	615	4-M39	–	–	–
600	154	178	1140	680	770	720	4-M36	795	735	4-M45	–	–	–
700	165	229	1268	780	875	820	4-M39	–	–	–	–	–	–
800	190	241	1432	860	990	930	4-M45	–	–	–	–	–	–
900	203	241	1528	900	1090	1030	4-M45	–	–	–	–	–	–
1000	216	300	1698	1000	1210	1140	4-M52	–	–	–	–	–	–
1200	254	360	1910	1100	1420	1350	4-M52	–	–	–	–	–	–

注：偏心型软密封(X)(J)蝶阀连接尺寸同上。4.0MPa以上结构长度为L2

Note: eccentric soft sealing (X) (J) butterfly valve connection size. 4.0MPa above structure length is L2

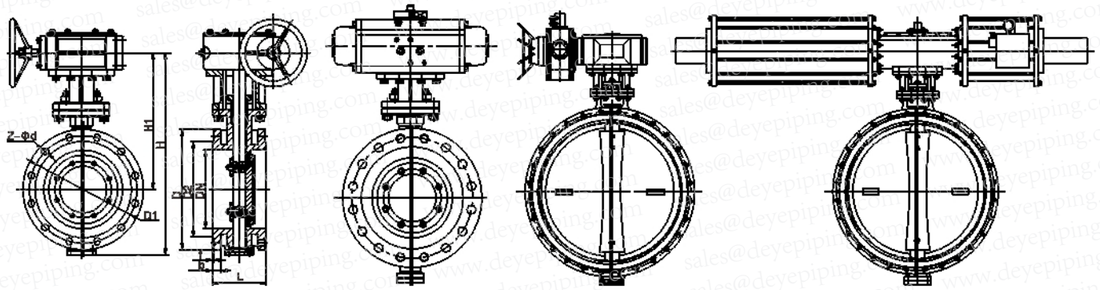

D341H D641H D941H

主要技术参数 Main Technology Parameter

公称通径 Nominal Diameter	公称压力 Nominal Pressure	试验压力Ps(MPa) Test Pressure			渗漏率 Leakage	适用温度 Appropriate Temperatuer	适用介质 Appropriate Medium	驱动形式 Drive Modality
DN(mm)	PN(MPa)	强度试验 Shell Test	密封试验 Seal Test	气密封试验 Air Sealing Test				
50～2000	0.6	0.9	0.66	0.6	<0.1×DNmm³/s (符合GB/T13927-92标准 According to Standard GB/T13927-92	碳钢 Carbon Steel: -29℃～425℃ 不锈钢 Stainless Steel: -40℃～600℃	空气、水、蒸气、煤气、油品以及酸、碱、盐等有弱腐蚀性介质等 Air,Water,Steam Coal Gas,Oil and Acid,Alkali,Salt Corrosive Medium and so on.	蜗杆蜗轮传动、气传动、电传动 Lever Operator, Worm Gear Operator, Pneumatic Operator, Electric Operator
	1.0	1.5	1.1	0.6				
	1.6	2.4	1.76	0.6				
	2.5	3.75	2.75	0.6				
50～500	4.0	6.0	4.4	0.6				

主要零件材质 Material for Main Parts

零件名称Parts Name	材料 Material
阀体Body	铸铁、不锈钢、铬钼钢、合金钢 Cast iron,Stainless steel ,Cr.Mo.Steel,alloy steel
蝶板Disc	铸钢、合金钢、不锈钢、铬钼钢 Cast steel,Alloy steel,stainless steel, Cr.Mo.Steel
密封圈Sealing Ring	不锈钢与耐高温石棉板组合成多层次Stainless steel and high temperature resistant asbestos composed of multiple layers
阀杆Stem	2Cr13、1Cr13不锈钢、铬钼钢Stainless steel,Cr.Mo.Steel
轴承Bearing	奥氏体不锈钢、304氮化ZG00CrNi10,304 nitrification
填料Packing	柔性石墨 Flexible Graphite

主要连接尺寸 Main Connection Dimensions

德标 EN1092-1 单位：Units: mm

通径 Diameter (mm)	主要尺寸 Main Dimension				0.6MPa					1.0MPa					1.6MPa				
	L1	L2	H	H1	D	D1	D2	Z-Φd	bxf	D	D1	D2	Z-Φd	bxf	D	D1	D2	Z-Φd	bxf
	D343H/F、D643H/F、D943H/F																		
50	108	150	275	200	140	110	90	4-Φ14	14x3	165	125	102	4-Φ18	18x3	165	125	102	4-Φ18	18x3
65	112	170	303	210	160	130	110	4-Φ14	14x3	185	145	122	8*-Φ18	18x3	185	145	122	8*-Φ18	18x3
80	114	180	324	226	190	150	128	4-Φ18	16x3	200	160	138	8-Φ18	20x3	200	160	138	8-Φ18	20x3
100	127	190	360	250	210	170	148	4-Φ18	16x3	220	180	158	8-Φ18	20x3	220	180	158	8-Φ18	20x3
125	140	200	460	295	240	200	178	8-Φ18	18x3	250	210	188	8-Φ18	22x3	250	210	188	8-Φ18	22x3
150	140	210	490	315	265	225	202	8-Φ18	18x3	285	240	212	8-Φ22	22x3	285	240	212	8-Φ22	22x3
200	152	230	600	380	320	280	258	8-Φ18	20x3	340	295	268	8-Φ22	24x3	340	295	268	12-Φ22	24x3
250	165	250	655	405	375	335	312	12-Φ18	22x3	395	350	320	12-Φ22	26x3	405	355	320	12-Φ26	26x3
300	178	270	780	480	440	395	365	12-Φ22	22x4	445	400	370	12-Φ22	26x4	460	410	378	12-Φ26	28x4
350	190	290	875	545	490	445	415	12-Φ22	22x4	505	460	430	16-Φ22	26x4	520	470	438	16-Φ26	30x4
400	216	310	910	550	540	495	465	16-Φ22	22x4	565	515	482	16-Φ26	26x4	580	525	490	16-Φ30	32x4
450	222	330	1000	620	595	550	520	16-Φ22	22x4	615	565	532	20-Φ26	28x4	640	585	550	20-Φ30	40x4
500	229	350	1090	680	645	600	570	20-Φ22	24x4	670	620	585	20-Φ26	28x4	715	650	610	20-Φ33	44x4
600	267	390	1210	750	755	705	670	20-Φ26	30x5	780	725	685	20-Φ30	34x5	840	770	725	20-Φ36	54x5
700	292	430	1350	820	860	810	775	24-Φ26	30x5	895	840	800	24-Φ30	35x5	910	840	795	24-Φ36	40x5
800	318	470	1520	910	975	920	880	24-Φ30	30x5	1015	950	905	24-Φ33	38x5	1025	950	900	24-Φ39	41x5
900	330	510	1570	930	1075	1020	980	24-Φ30	34x5	1115	1050	1005	28-Φ33	38x5	1125	1050	1000	28-Φ39	48x5
1000	410	550	1700	980	1175	1120	1080	28-Φ30	38x5	1230	1160	1110	28-Φ36	44x5	1255	1170	1115	28-Φ42	59x5
1200	470	630	2040	1220	1405	1340	1295	32-Φ33	42x5	1455	1380	1330	32-Φ39	55x5	1485	1390	1330	32-Φ48	78x5
1400	530	710	2240	1310	1630	1560	1510	36-Φ36	56x5	1675	1590	1535	36-Φ42	65x5	1685	1590	1530	36-Φ48	84x5
1600	600	790	2440	1460	1830	1760	1710	40-Φ36	63x5	1915	1820	1760	40-Φ48	75x5	1930	1820	1750	40-Φ56	102x5
1800	670	870	2650	1560	2045	1970	1920	44-Φ39	69x5	2115	2020	1960	44-Φ48	85x5	2130	2020	1950	44-Φ56	110x5
2000	760	950	2860	1670	2265	2180	2125	48-Φ42	74x5	2325	2230	2170	48-Φ48	90x5	2345	2230	2150	48-Φ62	124x5

通径 Diameter (mm)	2.5MPa					4.0MPa					6.3MPa					10.0MPa				
	D	D1	D2	Z-Φd	bxf	D	D1	D2	Z-Φd	bxf	D	D1	D2	Z-Φd	bxf	D	D1	D2	Z-Φd	bxf
50	165	125	102	4-Φ18	20x3	165	125	102	4-Φ18	20x3	180	135	102	4-Φ22	26x3	195	145	102	4-Φ26	30x3
65	185	145	122	8-Φ18	22x3	185	145	122	8-Φ18	22x3	205	160	122	8-Φ22	26x3	220	170	122	8-Φ26	34x3
80	200	160	138	8-Φ18	24x3	200	160	138	8-Φ18	24x3	215	170	138	8-Φ22	28x3	230	180	138	8-Φ26	36x3
100	235	190	162	8-Φ22	24x3	235	190	162	8-Φ22	24x3	250	200	162	8-Φ26	30x3	265	210	162	8-Φ30	40x3
125	270	220	188	8-Φ26	26x3	270	220	188	8-Φ26	26x3	295	240	188	8-Φ30	34x3	315	250	188	8-Φ33	40x3
150	300	250	218	8-Φ26	28x3	300	250	218	8-Φ26	28x3	345	280	218	8-Φ33	36x3	355	290	218	12-Φ33	44x3
200	360	310	278	12-Φ26	30x3	375	320	285	12-Φ30	34x3	415	345	285	12-Φ36	42x3	430	360	285	12-Φ36	52x3
250	425	370	335	12-Φ30	32x3	450	385	345	12-Φ33	38x3	470	400	345	12-Φ36	46x3	505	430	345	12-Φ39	60x3
300	485	430	395	16-Φ30	34x4	515	450	410	16-Φ33	42x4	530	460	410	16-Φ36	52x4	585	500	410	16-Φ42	68x4
350	555	490	450	16-Φ33	38x4	580	510	465	16-Φ36	46x4	600	525	465	16-Φ39	56x4	655	560	465	16-Φ48	74x4
400	620	550	505	16-Φ36	40x4	660	585	535	16-Φ39	50x4	670	585	535	16-Φ42	60x4	715	620	535	16-Φ48	78x4
450	670	600	555	20-Φ36	46x4	685	610	560	20-Φ39	57x4	735	645	560	20-Φ39	64x4	–	–	–	–	–
500	730	660	615	20-Φ36	48x4	755	670	615	20-Φ42	57x4	800	705	615	20-Φ48	68x4	–	–	–	–	–
600	845	770	720	20-Φ39	58x5	890	795	735	20-Φ48	72x5	930	820	735	20-Φ56	76x5	–	–	–	–	–
700	960	875	820	24-Φ42	50x5	–	–	–	–	–	–	–	–	–	–	–	–	–	–	–
800	1085	990	930	24-Φ48	53x5	–	–	–	–	–	–	–	–	–	–	–	–	–	–	–
900	1185	1090	1030	28-Φ48	57x5	–	–	–	–	–	–	–	–	–	–	–	–	–	–	–
1000	1320	1210	1140	28-Φ56	63x5	–	–	–	–	–	–	–	–	–	–	–	–	–	–	–
1200	1530	1420	1350	32-Φ56	70x5	–	–	–	–	–	–	–	–	–	–	–	–	–	–	–
1400	1755	1640	1560	36-Φ62	76x5	–	–	–	–	–	–	–	–	–	–	–	–	–	–	–
1600	1975	1860	1780	40-Φ62	84x5	–	–	–	–	–	–	–	–	–	–	–	–	–	–	–
1800	2195	2070	1985	44-Φ70	90x5	–	–	–	–	–	–	–	–	–	–	–	–	–	–	–
2000	2425	2300	2210	48-Φ70	96x5	–	–	–	–	–	–	–	–	–	–	–	–	–	–	–

GOST

俄标蝶阀系列

GOST butterfly valve series

俄标蝶阀性能、用途、特点
Gost Butterfly Valve’s Performance, Use and Characteristic

用途及特点 Uses and Characteristics

硬密封蝶阀系列产品，是我公司新开发的长寿命、节能型蝶阀。

本产品由阀体、蝶板、密封圈、传动机构等主要部件组成。其结构采用二维或三维偏心原理设计，弹性密封和硬软多层次密封兼容的加工新工艺，使蝶阀在运行工作时，减少其扭矩力，达到省力、节能之功能。从而确保蝶阀整体的抗腐蚀、耐高温、抗磨损的可能性。其主要性能特点是：

1、结构独特、型小轻便、操作灵活、省力、方便；
2、密封可靠，可满足各级标准；
3、流量特性好，且具有调节功能；
4、采用偏心原理，使密封面近似零磨损，延长了阀门使用寿命；
5、应用范围广，可用于水、蒸气、油品、空气、煤气等介质；
6、适用不同温度及6.4MPa以下的压力等级、耐腐蚀等各种工况之管线。

Metal seatad series butterfly valve is our company new product with long life and energy –saving.

This valve is composed of body, disc, seal ring, driving device and other main units. It adopts double or triple eccentric structure, resilience sealing, and soft/meta multilayer sealing. Its low torque achieves the function of saving energy when the butterfly valve is working. The ability of corrosion–resistance, high temperature resistance and wear–resistance is assured.Characteristics:

1.Unique design, light volume, smart operation, energy saving and convenience.
2.Reliable sealing suits any standard.
3.Good flow character and adjustable function.
4.Eccentric theory is adopted to extend the valve service life and the sealing surface almost zero wearing.
5.Widely used in various medium, such as water, oil, gas, steam, air and so on.
6.Suitable for pipelines of any working condition such as different temperature degree, pressure degree below 6.4Mpa, corrosive medium, etc.

用途 Uses

本蝶阀适用于食品、医药、石油化工、电厂、钢厂、工业环保水处理及高层建筑、供排水管道上作调节流量和截断流体最佳装置。

This kind of valve is used as the best device to adjust the flow and stop the medium on the pipeline. It fits various industries such as food, medication, electric station, and so on.

主要性能参数及采用标准 Main Performance Parameters and Standard

设计标准Design Standard		JB/8527–97 API609–2004		
法兰连接尺寸 Flange Connection Dimension		GOST 12815–80		
结构长度 Face to Face Dimension		GB12221–2005 API609–2004		
压力试验Pressure Test		GB/T13927–92 API598–2004		
公称通径Nominal Diameter		50~180		
公称压力Nominal Pressure		1.0	1.6	2.5
试验压力 Test Pressure	强度试验Shell Test	1.5	2.4	3.75
	密封试验Seal Test	1.1	1.76	2.75
	气密封试验 Air Sealing Test			
适用介质Applicable Medium		水、油品、蒸汽、煤气、酸、碱等Water, Oil, Steam, Gas, Acid, Alkali, Etc.		
适用温度Applicable Temperature		-40℃~570℃		

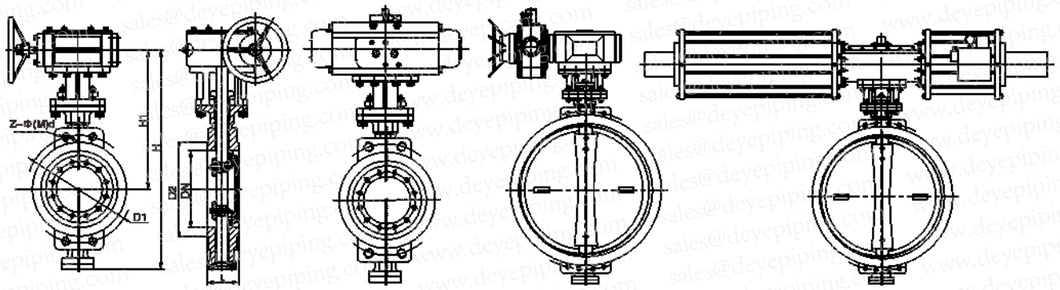

D373H　　D673H　　D973H

主要技术参数 Main Technology Parameter

公称通径 Nominal Diameter	公称压力 Nominal Pressure	试验压力(MPa) Test Pressure			渗漏率 Leakage	适用温度 Appropriate Temperatuer	适用介质 Appropriate Medium	驱动形式 Drive Modality
DN(mm)	PN(MPa)	强度试验 Shell Test	密封试验 Seal Test	气密封试验 Air Sealing Test				
50～2000	0.6	0.9	0.66	0.6	<0.1×DNmm³/s (符合GB/T13927-92标准 According to Standard GB/T13927-92	碳钢 Carbon Steel: -29℃～425℃ 不锈钢 Stainless Steel: -40℃～600℃	空气、水、蒸气、煤气、油品以及酸、碱、盐等有腐蚀性介质等 Air,Water,Steam Coal Gas,Oil and Acid,Alkali,Salt Corrosive Medium and so on.	蜗杆蜗轮传动、气传动、电传动 Lever Operator, Worm Gear Operator, Pneumatic Operator, Electric Operator
	1.0	1.5	1.1	0.6				
	1.6	2.4	1.76	0.6				
	2.5	3.75	2.75	0.6				
50～500	4.0	6.0	4.4	0.6				

主要零件材质 Material for Main Parts

零件名称Parts Name	材料 Material
阀体Body	铸铁、不锈钢、铬钼钢、合金钢 Cast iron,Stainless steel ,Cr.Mo.Steel,alloy steel
蝶板Disc	铸钢、合金钢、不锈钢、铬钼钢 Cast steel,Alloy steel,stainless steel, Cr.Mo.Steel
密封圈Sealing Ring	不锈钢与耐高温石棉板组合成多层次Stainless steel and high temperature resistant asbestos composed of multiple layers
阀杆Stem	2Cr13、1Cr13不锈钢、铬钼钢Stainless steel,Cr.Mo.Steel
轴承Bearing	奥氏体不锈钢、304氮化ZG00CrNi10,304 nitrification
填料Packing	柔性石墨 Flexible Graphite

主要连接尺寸 Main Connection Dimensions

俄标 GOST 12815-80单位Unit:mm

通径 Diameter (mm)	主要尺寸 Main Dimension				0.6MPa			1.0MPa			1.6MPa		
	L1	L2	H	H1	D1	D2	Z-Φ(M)d	D1	D2	Z-Φ(M)d	D1	D2	Z-Φ(M)d
	D373H/F、D673H/F、D973H/F												
50	43	43	272	200	110	90	4-14	125	102	4-18	125	102	4-18
65	46	46	335	225	130	110	4-14	145	122	4-18	145	122	4-18
80	49	64	355	240	150	128	4-18	160	138	4-18	160	138	4-18
100	56	64	385	255	170	148	4-18	180	158	4-18	180	158	4-18
125	64	70	455	305	200	178	4-18	210	188	4-18	210	188	4-18
150	70	76	490	325	225	202	4-18	240	212	4-22	240	212	4-22
200	71	89	590	380	280	258	4-18	295	268	4-22	295	268	4-22
250	76	114	655	410	335	312	4-18	350	320	4-22	355	320	4-26
300	83	114	740	460	395	365	4-22	400	370	4-22	410	378	4-26
350	92	127	840	525	445	415	4-22	460	430	4-M20	470	438	4-M24
400	102	140	890	545	495	465	4-M20	515	482	4-M24	525	490	4-M27
450	114	152	1010	630	550	520	4-M20	585	532	4-M24	585	550	4-M27
500	127	152	1065	650	600	570	4-M20	620	585	4-M24	650	610	4-M30
600	154	178	1140	680	705	670	4-M24	725	685	4-M27	770	725	4-M33
700	165	229	1268	780	810	775	4-M24	840	800	4-M27	840	795	4-M33
800	190	241	1432	860	920	880	4-M27	950	905	4-M30	950	900	4-M36
900	203	241	1528	900	1020	980	4-M27	1050	1005	4-M30	1050	1000	4-M36
1000	216	300	1698	1000	1120	1080	4-M27	1160	1110	4-M33	1170	1115	4-M39
1200	254	360	1910	1100	1340	1295	4-M30	1380	1330	4-M36	1390	1330	4-M45
1400	279	390	2140	1200	1560	1510	4-M33	1590	1535	4-M39	1590	1530	4-M45
1600	318	440	2420	1330	1760	1710	4-M33	1820	1760	4-M45	1820	1750	4-M52

通径 Diameter (mm)	主要尺寸 Main Dimension				2.5MPa			4.0MPa			6.3MPa		
	L1	L2	H	H1	D1	D2	Z-Φ(M)d	D1	D2	Z-Φ(M)d	D1	D2	Z-Φ(M)d
50	43	43	272	200	125	102	4-18	125	102	4-18	135	102	4-22
65	46	46	335	225	145	122	4-18	145	122	4-18	160	122	4-22
80	49	64	355	240	160	138	4-18	160	138	4-18	170	138	4-22
100	56	64	385	255	190	162	4-22	190	162	4-22	200	162	4-26
125	64	70	455	305	220	188	4-26	220	188	4-26	240	188	4-30
150	70	76	490	325	250	218	4-26	250	218	4-26	280	218	4-33
200	71	89	590	380	310	278	4-26	320	285	4-M27	345	285	4-M33
250	76	114	655	410	370	335	4-30	385	345	4-M30	400	345	4-M33
300	83	114	740	460	430	395	4-M27	450	410	4-M30	460	410	4-M33
350	92	127	840	525	490	450	4-M30	510	465	4-M33	525	465	4-M36
400	102	140	890	545	550	505	4-M33	585	535	4-M36	585	535	4-M39
450	114	152	1010	630	600	555	4-M33	610	560	4-M36	–	–	–
500	127	152	1065	650	660	615	4-M33	670	615	4-M39	–	–	–
600	154	178	1140	680	770	720	4-M36	795	735	4-M45	–	–	–
700	165	229	1268	780	875	820	4-M39	–	–	–	–	–	–
800	190	241	1432	860	990	930	4-M45	–	–	–	–	–	–
900	203	241	1528	900	1090	1030	4-M45	–	–	–	–	–	–
1000	216	300	1698	1000	1210	1140	4-M52	–	–	–	–	–	–
1200	254	360	1910	1100	1420	1350	4-M52	–	–	–	–	–	–

注：偏心型软密封(X)(J)蝶阀连接尺寸同上。4.0MPa以上结构长度为L2

Note: eccentric soft sealing (X) (J) butterfly valve connection size. 4.0MPa above structure length is L2

俄标法兰式蝶阀
Gost Flange Butterfly Valve

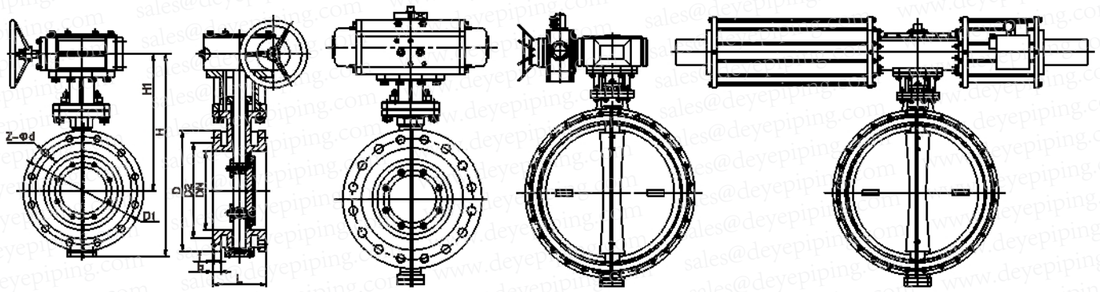

D341H　　D641H　　D941H

主要技术参数 Main Technology Parameter

公称通径 Nominal Diameter	公称压力 Nominal Pressure	试验压力(MPa) Test Pressure			渗漏率 Leakage	适用温度 Appropriate Temperatuer	适用介质 Appropriate Medium	驱动形式 Drive Modality
DN(mm)	PN(MPa)	强度试验 Shell Test	密封试验 Seal Test	气密封试验 Air Sealing Test				
50～2000	0.6	0.9	0.66	0.6	<0.1×DNmm³/s (符合GB/T13927-92标准 According to Standard GB/T13927-92	碳钢 Carbon Steel: -29℃～425℃ 不锈钢 Stainless Steel: -40℃～600℃	空气、水、蒸气、燃气、油品以及酸、碱、盐等有腐蚀性介质等 Air,Water,Steam Coal Gas,Oil and Acid,Alkali,Salt Corrosive Medium and so on.	蜗杆蜗轮传动、气传动、电传动 Lever Operator, Worm Gear Operator, Pneumatic Operator, Electric Operator
	1.0	1.5	1.1	0.6				
	1.6	2.4	1.76	0.6				
	2.5	3.75	2.75	0.6				
50～500	4.0	6.0	4.4	0.6				

主要零件材质 Material for Main Parts

零件名称Parts Name	材料 Material
阀体Body	铸铁、不锈钢、铬钼钢、合金钢 Cast iron,Stainless steel ,Cr.Mo.Steel,alloy steel
蝶板Disc	铸钢、合金钢、不锈钢、铬钼钢 Cast steel,Alloy steel,stainless steel, Cr.Mo.Steel
密封圈Sealing Ring	不锈钢与耐高温石棉板组合成多层次Stainless steel and high temperature resistant asbestos composed of multiple layers
阀杆Stem	2Cr13、1Cr13不锈钢、铬钼钢Stainless steel,Cr.Mo.Steel
轴承Bearing	奥氏体不锈钢、304氮化ZG00CrNI10,304 nitrification
填料Packing	柔性石墨 Flexible Graphite

俄标法兰式蝶阀
Gost Flange Butterfly Valve

主要连接尺寸 Main Connection Dimensions

俄标 GOST 12815-80　单位：Unit: mm

通径 Diameter (mm)	主要尺寸 Main Dimension				0.6MPa					1.0MPa					1.6MPa				
	L1	L2	H	H1	D	D1	D2	Z-Φd	bxf	D	D1	D2	Z-Φd	bxf	D	D1	D2	Z-Φd	bxf
	D343H/F、D643H/F、D943H/F																		
50	108	150	275	200	140	110	90	4-Φ14	14x3	160	125	102	4-Φ18	18x3	160	125	102	4-Φ18	18x3
65	112	170	303	210	160	130	110	4-Φ14	14x3	180	145	122	8*-Φ18	18x3	180	145	122	8*-Φ18	18x3
80	114	180	324	226	185	150	128	4-Φ18	16x3	195	160	138	8-Φ18	20x3	195	160	138	8-Φ18	20x3
100	127	190	380	250	205	170	148	4-Φ18	16x3	215	180	158	8-Φ18	22x3	215	180	158	8-Φ18	20x3
125	140	200	460	295	235	200	178	8-Φ18	18x3	245	210	188	8-Φ18	22x3	245	210	188	8-Φ18	22x3
150	140	210	490	315	260	225	202	8-Φ18	18x3	280	240	212	8-Φ22	22x3	280	240	212	8-Φ22	22x3
200	152	230	600	380	315	280	258	8-Φ18	20x3	335	295	268	8-Φ22	24x3	335	295	268	12-Φ22	24x3
250	165	250	655	405	370	335	312	12-Φ18	22x3	390	350	320	12-Φ22	26x3	405	355	320	12-Φ26	26x3
300	178	270	780	480	435	395	365	12-Φ22	22x4	440	400	370	12-Φ22	26x4	460	410	370	12-Φ26	28x4
350	190	290	875	545	485	445	415	12-Φ22	22x4	500	460	430	16-Φ22	26x4	520	470	430	16-Φ26	30x4
400	216	310	910	550	535	495	465	16-Φ22	22x4	565	515	482	16-Φ26	26x4	580	525	482	16-Φ30	32x4
450	222	330	1000	620	590	550	520	16-Φ22	22x4	615	565	532	20-Φ26	28x4	640	585	532	20-Φ30	40x4
500	229	350	1090	680	640	600	570	20-Φ22	24x4	670	620	585	20-Φ26	28x4	710	650	585	20-Φ33	44x4
600	267	390	1210	750	755	705	670	20-Φ26	30x5	780	725	685	20-Φ30	34x5	840	770	685	20-Φ36	54x5
700	292	430	1350	820	860	810	775	24-Φ26	26x5	895	840	800	24-Φ30	34x5	910	840	800	24-Φ36	40x5
800	318	470	1520	910	975	920	880	24-Φ30	26x5	1010	950	905	24-Φ33	36x5	1020	950	905	24-Φ39	42x5
900	330	510	1570	930	1075	1020	980	24-Φ30	26x5	1110	1050	1005	28-Φ33	38x5	1120	1050	1005	28-Φ39	44x5
1000	410	550	1700	980	1175	1120	1080	28-Φ30	28x5	1220	1160	1110	28-Φ36	38x5	1255	1170	1110	28-Φ42	46x5
1200	470	630	2040	1220	1400	1340	1295	32-Φ33	26x5	1455	1380	1330	32-Φ39	44x5	1485	1390	1330	32-Φ48	52x5
1400	530	710	2240	1310	1620	1560	1510	36-Φ36	32x5	1675	1590	1530	36-Φ42	48x5	1685	1590	1530	36-Φ48	58x5
1600	600	790	2440	1460	1820	1760	1710	40-Φ36	34x5	1915	1820	1750	40-Φ48	52x5	1925	1820	1750	40-Φ56	64x5
1800	670	870	2650	1560	2045	1970	1920	44-Φ39	36x5	2115	2020	1950	44-Φ48	56x5	2125	2020	1950	44-Φ56	68x5
2000	760	950	2860	1670	2265	2180	2125	48-Φ42	38x5	2325	2230	2150	48-Φ48	60x5	2340	2230	2150	48-Φ62	70x5

通径 Diameter (mm)	2.5MPa					4.0MPa					6.3MPa					10.0MPa				
	D	D1	D2	Z-Φd	bxf	D	D1	D2	Z-Φd	bxf	D	D1	D2	Z-Φd	bxf	D	D1	D2	Z-Φd	bxf
50	160	125	102	4-Φ18	20x3	160	125	102	4-Φ18	20x3	175	135	102	4-Φ22	26x3	195	145	102	4-Φ26	30x3
65	180	145	122	8-Φ18	22x3	180	145	122	8-Φ18	22x3	200	160	122	8-Φ22	26x3	220	170	122	8-Φ26	34x3
80	195	160	138	8-Φ18	24x3	195	160	138	8-Φ18	24x3	210	170	138	8-Φ22	28x3	230	180	138	8-Φ26	36x3
100	230	190	162	8-Φ22	24x3	230	190	162	8-Φ22	24x3	250	200	162	8-Φ26	30x3	265	210	162	8-Φ30	40x3
125	270	220	188	8-Φ26	26x3	270	220	188	8-Φ26	26x3	295	240	188	8-Φ30	34x3	310	250	188	8-Φ33	40x3
150	300	250	218	8-Φ26	28x3	300	250	218	8-Φ26	28x3	340	280	218	8-Φ33	36x3	350	290	218	12-Φ33	44x3
200	360	310	278	12-Φ26	30x3	375	320	285	12-Φ30	34x3	405	345	285	12-Φ36	42x3	430	360	285	12-Φ36	52x3
250	425	370	335	12-Φ30	32x3	445	385	345	12-Φ33	38x3	470	400	345	12-Φ36	46x3	500	430	345	12-Φ39	60x3
300	485	430	395	16-Φ30	34x4	510	450	410	16-Φ33	42x4	530	460	410	16-Φ36	52x4	585	500	410	16-Φ42	68x4
350	550	490	450	16-Φ33	38x4	570	510	465	16-Φ36	46x4	595	525	465	16-Φ39	56x4	655	560	465	16-Φ48	74x4
400	610	550	505	16-Φ36	40x4	655	585	535	16-Φ39	50x4	670	585	535	16-Φ42	60x4	715	620	535	16-Φ48	78x4
450	660	600	555	20-Φ36	48x4	660	610	560	20-Φ39	57x4	735	645	560	20-Φ39	64x4	–	–	–	–	–
500	730	660	615	20-Φ36	48x4	755	670	615	20-Φ42	57x4	800	705	615	20-Φ48	68x4	–	–	–	–	–
600	840	770	720	20-Φ39	58x5	890	795	735	20-Φ48	64x5	930	820	735	20-Φ56	76x5	–	–	–	–	–
700	960	875	820	24-Φ42	50x5	995	900	840	24-Φ48	68x5	–	–	–	–	–	–	–	–	–	–
800	1075	990	930	24-Φ48	54x5	1135	1030	960	24-Φ56	76x5	–	–	–	–	–	–	–	–	–	–
900	1185	1090	1030	28-Φ48	58x5	1250	1140	1070	28-Φ56	82x5	–	–	–	–	–	–	–	–	–	–
1000	1315	1210	1140	28-Φ56	62x5	1360	1250	1180	28-Φ56	88x5	–	–	–	–	–	–	–	–	–	–
1200	1525	1420	1350	32-Φ56	70x5	1575	1460	1380	32-Φ62	96x5	–	–	–	–	–	–	–	–	–	–
1400	1750	1640	1560	36-Φ62	78x5	–	–	–	–	–	–	–	–	–	–	–	–	–	–	–
1600	1970	1860	1780	40-Φ62	84x5	–	–	–	–	–	–	–	–	–	–	–	–	–	–	–
1800	2190	2070	1985	44-Φ70	90x5	–	–	–	–	–	–	–	–	–	–	–	–	–	–	–
2000	2420	2300	2210	48-Φ70	96x5	–	–	–	–	–	–	–	–	–	–	–	–	–	–	–

METAL TO METAL

全金属双向硬密封蝶阀系列

Bi-directional butterfly valve

双向硬密封蝶阀
Bidirectional Metal Seated Butterfly Valve

双向硬密封蝶阀是我公司专业技术人员经优化设计、含国家专利的优点、高性能产品。

阀门结构型式

双向硬密封蝶阀结构形式采用可浮动的密封环，密封环在阀体上可以依阀板关闭时的推力适当调整自身的位置，可浮动的密封能补偿阀门在不同工况(如高温)下生产变形、热膨胀等因数，消除对密封面的损坏，确保密封啮合遍压均匀，延长密封件使用寿命，提高密封效果。

阀座圈在温度循环状态下保持关闭性能；阀体的收缩不传向阀座，不是阀门出现阻滞。

阀门的可浮动密封，长期使用密封性能下降时，可通过更换密封环，即可恢复密封性能，同时可以实现在现场拆卸更换密封环，同一规格蝶阀的密封环具有很好的通用互换性。

阀门采用轴向定位装置不发生轴向蝶板窜动而引起上下密封面部分压伤，磨损泄漏。

阀门适用于热力管道的关断及流量控制，应具有优良的耐腐蚀性能和双向密封性能。

再设计参数下，阀门的双向密封等级均达到GB/T13927-92标准中最大允许泄漏量B级。

阀体能承受热力网可能产生的最大扭矩300N/mm',阀门的外壳壁厚能承受热网的轴向力，并在保证使用年限内，再设计参数下开关灵活自如，无卡涩现象。

Bidirectional metal seated butterfly valve is the high performance product which is designed optimally by our company's professional technicians containing the advantages of national patent.

Valve Structure

Bidirectional metal seated butterfly Valve adopts the floating seal ring structure. It can adjust position on the body automatically depending on the pushing power of closing the disc. Floating seal can compensate for various factors such as deformation and thermal expension in different working conditions. It can eliminate the damage of sealing surface to assure the sealing fitted and evenly affording pressure. Using life is extended and sealing performance is improved.

Seat ring keeps closing performance under the cycling temperature; the contraction of the body won't pass to the seat. It will prevent the valve from obstraction.

When the sealing performance decreased after long time using, changing the seal ring, and the sealing performace would be recovered. The seal ring can be disboarded and changed at the spot. The seal ring of same specification butterfly valves has good changeable performance.

The valve adopts shaft direction position device. It can avoid the pressure damage, wear and leakage of sealing surface caused by the disc moves.

The valve is adjustable for flow control and the stop of pipeline, and has great corossion resistance and bidirectional sealing.

Valves' bidirectional sealing degree achieves the max leakage of B degree under design parameter according to GB/T13927-92.

The valve can afford the heat network max torque 300N/□2. It is assured that the wall thickness of the valve can afford the axial force of heating net and smart operation in limited using years.

双向硬密封蝶阀
Bidirectional Metal Seated Butterfly Valve

双向密封蝶阀系列是我公司应广大用户要求，精心研究设计的新一代产品。该系列蝶阀引进了国内外先进的制造技术，以独特新颖的结构，获得高品质的性能。该阀结构合理，密封严密可靠、流阻小、压差低、驱动灵活省力，使用寿命倍增。符合GB/T12238《法兰和对夹连接蝶阀》和JB/T8527《金属密封蝶阀》标准，并参照美国ANSI/AWWAC504标准，采用美国CAD软件辅助设计。特殊的设计，特殊的几何结构，使阀板具有越关越紧的功能，当打开阀门时，只要阀轴稍微旋转，阀板即全部脱离阀座，减少了摩擦力，使开启力矩呈现最小最佳状态，密封严实可靠，经久耐用，广泛的应用于水利工程、自来水、水力循环水、石油、化工等工业管道上作截断介质流动。

Bidirectional metal seated butterfly valve series is our company new product designed meticulously according to the customers' requirements. This series product adopts advanced technology around the world, achieving the high quality performance by the unique design. The valve is characterised by reasonable structure, reliable sealing, small flow-resistance , smart driving, low pressure, differential and several times working life. The valve is suitable for GB/T12238 *Flange and Wafer Connection Butterfly Valve* and JB/T *Metal Seated Butterfly Valve*.The Valve is designed with CAD and refers to ANSI/AWWAC504. Unique design and geometric structure makes the disc more closing, more tight. When the valve is opening, the stem rotates lightly, and the disc sepreates from seat completely, reducing the friction. These design make the valve torque minium, the sealing reliable and the valve durable. This series valve is widely used in various industries such as irrigation, tap water, oil, chemical industry and circulating water, etc.

用途及特点uses And Charac Teristics

1、蝶阀为双向承压，双向密封。采用了偏心S型锥形阀座或可移动活塞式阀座，确保了反向承压性能。
2、操作扭矩较小，转90度启闭，轻便迅速。
3、流阻小，具有良好的水力特性，流量特性近似倾斜直线，节能效果好，双向密封对水流无方向要求。
4、密封可靠，启闭寿命达到数25000次以上，使用寿命25年以上。
5、阀板采用符合流体力学性能的双平板桁架式多流道设计。

1.The butterfly valve is bidirectional sealing and pressure-affording. It adopts eccentric S type and cone seat or mobile piston seat to assure the ability ofaffording the reverse pressure.
2.Small torque, smart operation and convenience, 90° opening and closing.
3.Small flow-resistance , good water feature, good energy-saving. Flow feature is similar to oblique line and no direction requirements.
4.Life of opening and closing is above 25000 times, and valve using life is above 25 years, and it has reliable sealing.
5.Valve disc adopts double flat and trussed constructuon and multiflow channel structure which suits hydrodynamics.

型号说明 Model Description

□ □ □ □ □ — □ □

阀体材料：C-碳钢、P-不锈钢、Q-球墨铸铁
Body material:C- Carbon steel,P- Stainless steel, Q- Ductile iron
公称压力：数字表示，为单位MPa的10倍
Nominal pressure: digital representation, is 10 times the per unit MPa
密封面材料：H-Cr13系不锈钢、P-不锈钢、X-橡胶
Sealing surface material: H-Cr13 stainless steel, P- stainless steel, X- rubber.
结构形式代号：3-三偏心金属密封、7-双偏心橡胶密封
Structure of code: 3- three eccentric metal sealing, 7- double eccentric rubber seal
连接方式：4-法兰式 Connection: 4-flange type
传动方式：3-蜗轮、6-气动、9-电动
Operator mode: 3-worm, 6-pneumatic,9- electric
类别：第一空格DS表示双向密封 Category: the first space DS two-way sealing

主要技术参数Main Technology Parameter

公称压力 Nominal Pressure	0.6MPa	1.0MPa	1.6MPa	2.5MPa
公称通径 Nominal Diameter	80~3000 mm	80~3000 mm	80~2000 mm	80~1200 mm
密封试验 Seal Test	0.66MPa	1.1MPa	1.76MPa	2.75MPa
壳体强度试验 Shell Strength Test	0.9MPa	1.5MPa	2.4MPa	3.75MPa
适用温度 Applicable Temperature	≤100℃~600℃			
适用介质 Applicable Medium	烟气、热水、蒸汽、煤气、酸、碱、食品 Flue gas, Hot water, Steam, Gas, Acid, Alkali, Food			
驱动形式 Operation	蜗轮传动、电动、气动 Worm gear, Electric, Pneumatic			

主要零件材质Material for Main Parts

阀体 Body	铸钢、不锈钢、球墨铸铁 Cast steel, Stainless steel, Ductile iron
阀座 Seat	不锈钢 Stainless Steel
蝶板 Disc	铸钢、不锈钢、球墨铸铁 Cast steel, Stainless steel, Ductile Iron
密封圈 Sealing Ring	不锈钢、橡胶 Stainless steel, Rubber
阀杆 Stem	2Cr13不锈钢、1Cr13不锈钢、45#钢 2Cr13 stainless steel, 1Cr13 stainless steel, 45# steel
衬套 Bushing	铸铝青铜、自润轴承 Molybdenum bronze casting, Self lubricating bearing

对焊式金属硬密封蝶阀
Butt Welding Metal Seated Butterfly Valve

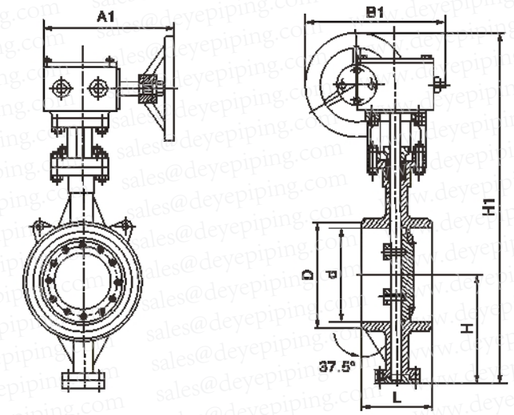

用途及特点Uses and Charac Teristics

本蝶阀适用于高温、高压、防火、保温等管道上作启闭或调节介质之用。其主要特点如下：
1、结构紧凑、体积小、重量轻、操作灵活、使用方便；
2、采用三维偏心弹性或多层次硬密封结构，其密封性能可靠达到零泄漏；
3、此阀无法兰，对管道的保温包扎带来很大方便和美观；
4、具有耐高温、高压、耐腐蚀、耐磨损等特点。

The butterfly valve is used as opening and closing, or adjusting medium on the pipe of high temperature, high pressure and fireproof. Its main charateristics as below:
1.Tight structure, small volume, light weight, smart operation and convenient using.
2.The valve adopts triple eccentric resilence or multilayer metal seated structure to achieve zero leakage of sealing.
3.This valve doesn't have flange, so it is convenient for thermal insulation of the pipeline.
4.The valve is characterised by high temperature resistance, high pressure resistance, corrosion resistance and wear resistance, etc.

传动型式Drive Type

蜗轮传动、气动传动、电动传动。
Worm gear drive,pneumatic drive,electric drive.

采用标准Adoption Standard

焊接尺寸 Welding dimension: GB12224; ANSI B16.25; DIN2559
结构长度 Face to face length: GB/T12221-1989; API609
压力试验 Pressure test: GB/T13927-1992; API598

主要技术参数Main Technology Parameter

公称通径Nominal Diameter	DN(mm)	50~700				
公称压力Nominal Pressure	PN(MPa)	0.6	1.0	1.6	2.5	4.0
试验压力 Ps(MPa) Test Pressure	强度试验Shell test	0.9	1.5	2.4	3.75	6.0
	密封试验Seal test	0.66	1.1	1.76	2.75	4.4
	气密封试验Air Sealing Test	0.6	0.6	0.6	0.6	0.6
适用介质 Appropriate Medium	水、蒸气、油品、酸类腐蚀性等。Water，Steam，Oil，Acid corrosive and so on.					
适用温度 Appropriate Temperatuer	碳钢Carbon steel：-29℃~425℃ 不锈钢Stainless steel：-40℃~600℃					

主要零件材质Material for Main Parts

零件名称Parts Name	材料Material
阀体Body	铸钢、不锈钢、铬钼钢及特殊材料Cast steel,stainless steel,Cr.Mo.Steel and ad hoc material
蝶板Disc	铸钢、合金钢（镀硬铬）、不锈钢、铬钼钢及特殊材料 Cast steel,Alloy steel,stainless steel, Cr.Mo.Steel and ad hoc material
密封圈 Sealing Ring	不锈钢、抗磨材料Stainless steel,resist grind material
阀杆Stem	2Cr13、1Cr13不锈钢、铬钼钢Stainless steel,Cr.Mo.Steel
填料Packing	柔性石墨Flexible Graphite

对焊式金属硬密封蝶阀
Butt Welding Metal Seated Butterfly Valve

主要连接尺寸 Main Connection Dimensions

单位Unit:mm

公称压力 Nominal Pressure								PN0.6MPa	公称压力 Nominal Pressure								PN1.0MPa
通径 Diameter		外形尺寸(参考值) External Dimension(Consult)							通径 Diameter		外形尺寸(参考值) External Dimension(Consult)						
mm	inch	L	D	d	H	H1	A	B	mm	inch	L	D	d	H	H1	A	B
600	24	390	636	602	499	1280	570	660	600	24	390	636	602	499	1280	570	660
700	28	430	726	692	566	1480	750	550	700	28	430	726	692	566	1480	750	550
800	32	470	826	792	632	1608	750	550	800	32	470	826	792	632	1608	750	550
900	36	510	926	892	693	1857	750	550	900	36	510	926	892	693	1857	750	550
1000	40	550	1028	992	757	2038	900	750	1000	40	550	1028	992	757	2038	900	750
1200	48	630	1228	1192	851	2237	1000	925	1200	48	630	1228	1192	851	2237	1000	925
1400	56	710	1428	1392	876	2411	1000	925	1400	56	710	1428	1392	876	2411	1000	925
1600	64	790	1628	1592	1095	2756	1000	925	1600	64	790	1628	1592	1095	2756	1000	925
1800	72	870	1828	1792	1214	3093	1100	980	1800	72	870	1828	1792	1214	3093	1100	980
2000	80	950	2028	1992	1332	3355	1100	980	2000	80	950	2028	1992	1332	3355	1100	980

公称压力 Nominal pressure								PN1.6MPa	公称压力 Nominal pressure								PN1.6MPa
通径 Diameter		外形尺寸(参考值) External Dimension(consult)							通径 Diameter		外形尺寸(参考值) External Dimension(consult)						
mm	inch	L	D	d	H	H1	A	B	mm	inch	L	D	d	H	H1	A	B
80	3	180	90	78	90	356	180	200	600	24	390	636	602	509	1369	570	660
100	4	190	110	96	100	375	180	200	700	28	430	726	692	572	1492	750	550
125	5	200	135	121	113	401	180	200	800	32	470	826	792	638	1622	750	550
150	6	210	161	146	130	450	270	280	900	36	510	926	892	700	1924	750	550
200	8	230	222	202	205	545	400	425	1000	40	550	1028	992	765	2054	900	750
250	10	250	278	254	235	630	400	425	1200	48	630	1228	1192	860	2259	1000	925
300	12	270	330	303	275	715	450	560	1400	56	710	1428	1392	986	2610	1000	925
350	14	290	382	351	309	817	450	560	1600	64	790	1628	1592	1106	2856	1000	925
400	16	310	432	398	346	923	535	580	1800	72	870	1828	1792	1226	3121	1100	980
450	18	330	484	450	392	1059	535	580	2000	80	950	2028	1992	1345	3385	1100	980
500	20	350	535	501	427	1126	535	580									

公称压力 Nominal Pressure								PN2.5MPa	公称压力 Nominal Pressure								PN4.0MPa
通径 Diameter		外形尺寸(参考值) External Dimension(consult)							通径 Diameter		外形尺寸(参考值) External dimension(consult)						
mm	Inch	L	D	d	H	H1	A	B	mm	Inch	L	D	d	H	H1	A	B
80	3	180	90	78	90	356	180	200	80	3	180	90	78	106	430	180	200
100	4	190	110	96	106	387	180	200	100	4	190	110	96	106	392	180	200
125	5	200	135	121	122	413	180	200	125	5	200	135	120	120	414	180	200
150	6	210	161	146	136	459	270	280	150	6	210	161	145	135	494	270	280
200	8	230	222	202	215	585	400	425	200	8	230	222	200	202	578	400	425
250	10	250	278	254	247	649	400	425	250	10	250	278	252	235	673	400	425
300	12	270	330	303	268	771	450	560	300	12	270	330	301	280	793	450	560
350	14	290	382	351	333	929	450	560	350	14	290	382	351	315	921	450	560
400	16	310	432	398	359	993	535	580	400	16	310	432	398	355	1021	535	580
450	18	330	484	450	405	1053	535	580	450	18	330	484	448	370	1143	535	580
500	20	350	535	501	444	1245	535	580	500	20	350	535	495	420	1192	535	580
600	24	390	636	602	521	1750	570	660	600	24	390	636	595	490	1327	570	660
700	28	430	726	692	586	1519	750	550									
800	32	470	826	792	659	1659	750	550									
900	36	510	926	892	720	1829	750	550									
1000	40	550	1028	992	780	1949	900	750									
1200	48	630	1228	1192	889	2243	1000	925									
1400	56	710	1428	1392	1000	2462	1000	925									

伸缩蝶阀
Telescopic Butterfly Valve

用途及特点Uses and Characteristics

伸缩蝶阀适用于温度≤80℃，公称压力≤1.6MPa的食品、医药、化工、石油、电力、轻纺、造纸等给排水、气体管道上作调节流量和截流介质的作用，具有补偿管道热胀冷缩的功能。其主要特点如下：

1、设计新颖、合理、结构独特、重量轻、操作方便、启闭迅速；

2、伸缩蝶阀除了能作调节和截流作用、补偿管道温差所产生的热胀冷缩功能外，还有为安装更换、维修阀门提供方便；

3、密封部位可调节更换、密封性能可靠等特点。

Telescopic butterfly valve is suitable for various industries such as food, medication, chemical industry, oil, electricity textile and paper making, etc. The valve can be used as adjusting flow and stopping the medium. The valve compensates the pipeline's expension caused by heat and contraction caused by cold.Its main characteristic as below:

1.Neoteric design, reasonbale and unique structure, light weight, and quick opening and losing.
2.Telescopic valve is also convenient for installation, replacing and valve-repairing.
3.The valve has reliable sealing, and the sealing parts can be changeable.

采用标准Adoption Standard

设计标准 Design Standard: GB/T12238-1989
法兰连接尺寸 Flange Connection Dimension: GB/T9113.1-2000; GB/T9113.2-2000
GB/T9115.1-2000; GB/T9115.2-2000
压力试验 Pressure Test: GB/T13927-1992; JB/T9092-1999

主要技术参数Main Technology Parameter

公称通径 Nominal diameter	DN(mm)	50～2000		
公称压力Nominal pressure	PN(MPa)	0.6	1.0	1.6
压力试验 Ps(MPa) Pressure Test	强度试验Shell Test	0.9	1.5	2.4
	密封试验Seal Test	0.66	1.1	1.76
	气密封试验Air Sealing Test	0.6	0.6	0.6
适用温度Applicable Temperature	≤80℃			
适用介质Applicable Media	空气、水蒸气、煤气、油品等。Air, Steam, Gas, oil etc.			
驱动形式Operation	手动、蜗杆蜗轮传动、气传动、电传动。Manual, Worm Gear, Pneumatic, Electric			

主要零件材质Material for Main Parts

零件名称Parts name	材料 Material
阀体Body	铸铁、铸钢、不锈钢、铬钼钢、合金钢 Cast iron, Cast Steel, Stainless Steel, Chrome-molybdenum Steel, Alloy Steel
蝶板Disc	铸钢、合金钢、不锈钢、铬钼钢 Cast Steel, Alloy Steel, Stainless Steel, Chrome-molybdenum Steel
密封圈Seal Ring	橡胶、聚四氟、聚内酯、不锈钢 Rubber, PTFE, Polyester, Stainless Steel
阀杆Stem	2Cr13、不锈钢、铬钼钢2Cr13, Stainless Steel, Chrome-molybdenum Steel
伸缩管 Flexible Tube	铸铁、铸钢、不锈钢、铬钼钢Cast Iron, Cast Steel, Stainless Steel, Chrome-molybdenum Steel
填料Packing	柔性石墨 Flexible Graphite

伸缩蝶阀安装使用注意事项
Telescopic Butterfly Valve Installation Precuations

1、伸缩蝶阀在安装前必须平放，切勿随意碰撞。

2、伸缩蝶阀出厂时结构长度为最小长度，安装时，拉至安装长度(即设计长度)。

3、当管道间长度超过伸缩阀安装长度时，请调整管道间隔，切勿强行拉伸缩阀，以免损坏伸缩阀。

4、伸缩蝶阀可在任意位置安装，做温度补偿用时，在管道安装完成后，需沿管道轴线方向两端加支架，防止伸缩阀伸缩管拉出(见图1)，支架的支承力按下列公式计算，运行时严禁将支架卸掉。

$$F > \frac{\pi}{4} PS \cdot DN^2 \cdot (kgf)$$

式中：PS–管道试验压力，DN–管道直径

5、伸缩蝶阀不做温度补偿时，只做安装更换、维修阀门方便用时，可用通螺栓限位，对称夹紧伸缩蝶阀以防止伸缩管拉出(见图2)。损坏伸缩蝶阀及管道装置或建筑物。螺栓直径可按照法兰螺栓直径，其螺栓强度和承受试验压力及管道拉力，按上公式进行计算，运行时限位螺栓晋严禁卸掉(螺栓另配)

6、管道施工现场严禁随意拆卸解体伸缩蝶阀。

7、本伸缩蝶阀，加工精细，配合严密，请勿在现场随意反复拉长压短伸缩蝶阀。管道安装时，要求伸缩阀两端管道必须同心，管道上的两法兰面要求平行。

8、法兰固定螺栓应对称紧固，请勿单边强行紧固法兰固定螺栓。

9、伸缩管安装在阀门后。

10、伸缩阀伸缩部分不得安装在管道拐角处或管道末端。

1.Telescopic butterfly valve should be placed horizontally, any collision is not allowed.

2.When telescopic butterfit valve left factory, its face to face dimension is the minimum length. While installing, the valve should be stretched to installation length(Design Length).

3.When the space between pipelines is larger than the valve installation length, plz adjust the space between pipelines, and don't force to stretch the valve to prevent the damage of valve.

4.Telescopic butterfly valve can be installed in any position. When it used as temperature compensation, brackets should be added both ends alon the axis of the pipeline to prevent the telescopic tube of the valve extends after installing the pipeline(Figure 1). It's not allowed that disboarding th bracket under working. Holding power of brackets is calculated as below:

$$F > \frac{\pi}{4} PS \cdot DN^2 \cdot (kgf)$$

Note: PS stands for Pipe Test Pressure DN stands for Nominal Diameter

5.Telescopic butterfly valve can limit space through bolts when the valve is used as installation, valve-repairing and replacing. Clamp the telescopic butterfly valve tightly to prevent the stretch tube extending(Figure 2), and damaging the valve, pipe devices and buildings. Diameter of bolts can be calcualted through upper fprmula according to the flange bolts' diameter and strength, affording test pressure and traction of pipeline. Disboarding bolts is not allowed under wirking(Equipped bolts).

6.It's not allowed that disboard the valve at live pipeline construction spot.

7.This product is processed minutely and working tightly, plz don't stretch the valve causally at the spot. Two flange flats is required parallel, and the both ends' pipline of the valve should be concentric while installing the pipeline.

8.Fixed flange bolts should be symmetrically fastened, plz don't force to fasten the bolts on one side.

9.Telescopic tube should be installed as the back of the valve.

10.The stretch part of telescopic butterfly valve isn't allowed to install as the corner of the pipeline.

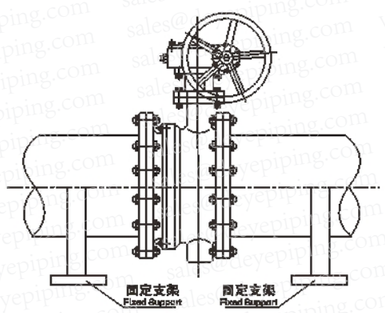

(图1)

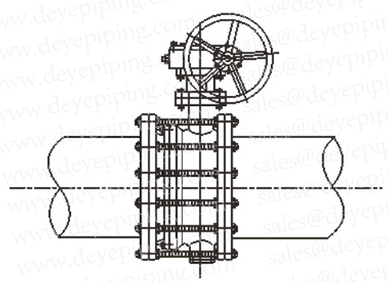

(图2)

伸缩蝶阀
Telescopic Butterfly Valve

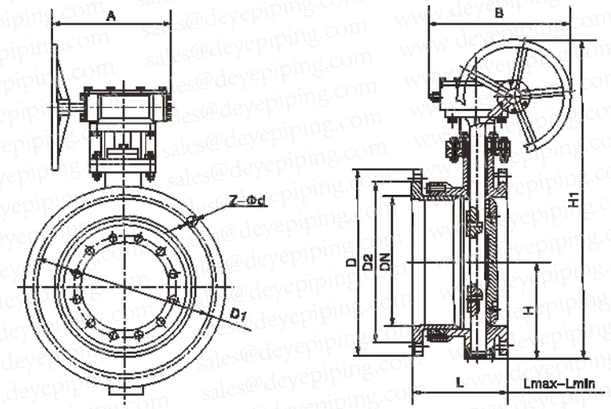

主要连接尺寸 Main Connection Dimension

单位Unit:mm

公称通径 Nominal Diameter (mm)		外形尺寸（参考值） External Dimension(Consult)							法兰尺寸和螺栓孔尺寸（标准值） Flange Dimension and Bolt Hole Dimension(Standard)											
		H	H1	设计最大长度 Design Max. Length	设计最小长度 Design Min. Length	设计长度 L Design Length	A	B	0.6MPa				1.0MPa				1.6MPa			
mm	Inch								D	D1	D2	Z-Φd	D	D1	D2	n-Φd	D	D1	D2	Z-Φd
50	2	80	309	186	156	171	180	200	140	110	88	4-14	165	125	99	4-18	165	125	99	4-18
65	21/2"	95	337	190	160	175	180	200	160	130	108	4-14	185	145	118	4-18	185	145	118	4-18
80	3	98	347	198	166	182	180	200	190	150	124	4-18	200	160	132	8-18	200	160	132	8-18
100	4	114	373	228	188	208	180	200	210	170	144	4-18	220	180	156	8-18	220	180	156	8-18
125	5	128	405	240	201	220	180	200	240	200	174	8-18	250	210	184	8-18	250	210	184	8-18
150	6	139	440	246	206	226	270	280	265	225	199	8-18	285	240	211	8-22	285	240	211	8-22
200	8	174	612	265	219	242	400	425	320	280	254	8-18	340	295	266	8-22	340	295	266	12-22
250	10	215	693	295	240	267	400	425	375	335	309	12-18	395	350	319	12-22	405	355	319	12-26
300	12	245	747	308	254	282	450	560	440	395	363	12-22	445	400	370	12-22	460	410	370	12-26
350	14	270	802	327	272	300	450	560	490	445	413	12-22	505	460	429	16-22	520	470	429	16-26
400	16	305	991	368	308	338	535	580	540	495	463	16-22	565	515	480	16-26	580	525	480	16-30
450	18	325	1037	370	310	340	535	580	595	550	518	16-22	615	565	530	20-26	640	585	548	20-30
500	20	360	1127	392	332	362	535	580	645	600	568	20-22	670	620	582	20-26	715	650	609	20-33
600	24	445	1377	441	375	408	570	660	755	705	667	20-26	780	725	682	20-30	840	770	720	20-36
700	28	505	1496	460	400	430	750	550	860	810	772	24-26	895	840	794	24-30	910	840	794	24-36
800	32	560	1584	499	445	475	750	550	975	920	878	24-30	1015	950	901	24-33	1025	950	901	24-39
900	36	630	1676	520	460	490	750	550	1075	1020	978	24-30	1115	1050	1001	28-33	1125	1050	1001	28-39
1000	40	680	1760	600	530	565	900	750	1175	1120	1078	28-30	1230	1160	1112	28-36	1255	1170	1112	28-42
1200	48	795	2018	675	571	623	1000	925	1405	1340	1295	32-33	1455	1380	1328	32-39	1485	1390	1328	32-48
1400	56	900	2363	760	683	722	1000	925	1630	1560	1510	36-36	1675	1590	1530	36-42	1685	1590	1530	36-48
1600	64	1100	2723	860	770	815	1000	925	1830	1760	1710	40-36	1915	1820	1750	40-48	1930	1820	1750	40-56
1800	72	1124	2844	930	830	880	1100	980	2045	1970	1718	44-39	2115	2020	1950	44-48	2130	2020	1950	44-56
2000	80	1292	3127	1020	920	970	1100	980	2265	2180	2125	48-42	2325	2230	2150	48-48	2345	2230	2150	48-62

通风蝶阀
Aeration Butterfly Valve

用途及特点Purpose and Characteristic

通风蝶阀采用与阀体相同材料加工成密封圈，其适用温度随阀体选材而定，公称压力≤0.6MPa，一般适用于工业、冶金、环保等管道作通风调节介质流量之用。其主要特点为：

1、设计新颖、合理、结构独特，重量轻，启闭迅速。

2、操作力矩小，操作方便，省力灵巧。

3、采用适应的材料以满足低、中、高不同介质温度及其腐蚀性介质等。

Aeration butterfly valve adopts the material same to body to process the seal ring. Applicable temperature is up to the body material, Nominal pressure ≤ 0.6 Mpa, usually used as areation and adjusting medium and flow in the pipe of various industries such as environmental protection, metallurgy and industry,etc.

Products'characteristics:

1.Neoteric design, reasonable and unique structure, light weight, and quick closing and opening.

2.Small torque, convenient and smart opreation and labor-saving.

3.Adopting applicable material to satisfy different media temperature of low, middle and high grade and corrosive medium.

采用标准Adopted Standard

设计标准 Design Standard：GB/T12238－1989 JB/T8692－1998

法兰连接尺寸 Flange Connection Dimension：GB/T9115.1－2000

结构长度 Face to Face Dimension：GB/T12221－1989

压力试验 Pressure Test：GB/T13927－1992；JB/T9092－1999

主要技术参数Main Technical Parameters

公称通径Nominal Diameter	DN(mm)	50～2000		
公称压力Nominal Pressure	PN(MPa)	0.05	0.25	0.6
试验压力PS(MPa) Test Pressure	强度试验 Strength Test	0.075	0.375	0.9
	密封试验 Seal Test	≤1.5%泄漏量 Leakage		
适用介质 Applicable Media	煤气、含尘气体、烟道气等。 Coal Gas, Gas Containing Dust, Flue Gas			
驱动形式 Operation	手动、蜗杆蜗轮传动、气传动、电传动。Manual, Worm Gear, Pneumatic, Electric			

主要零件材质Material for Main Parts

零件名称 Parts name	材料 Material
阀体 Body	铸钢、不锈钢、铬镍钼钛钢、铬钼钛钢等特殊材料 Cast steel,stainless steel,Cr.Ni.Mo.Ti Steel ,Cr.Mo.Ti Steel and ad hoc material
蝶板Disc	铸钢、不锈钢、铬镍钼钛钢、铬钼钛钢等特殊材料 Cast steel,stainless steel,Cr.Ni.Mo.Ti Steel ,Cr.Mo.Ti Steel and ad hoc material
密封圈 Sealing Ring	与阀体相同 Same as Body of Valve
阀杆 Stem	碳钢、2Cr13、不锈钢、铬镍钼钛钢 Carbon Steel,2Cr13,Stainless Steel.Cr.Ni.Mo.Ti steel
填料 Packing	氟塑料、柔性石墨 Fluorine plastic,flexible graphite

蝶阀密封材料选用和适用温度Butterfly Valve Seal Material Choice and Appropriate Temperature

材料品种 Material Variety	碳素钢 Cast Steel	低温碳钢 Cryogenic Cast Steel	合金钢 Alloy Steel		奥氏体不锈钢 Austenitic Stainless Steel	铬钼钢 Chrome-molybdenum Steel
代号 Code Name	WCB	LCB	WC6或orWC9	C5或orC12	铬Cr-18型type、304、316	12CrMoV
耐最高温度 Max. Enduring Temperature	425℃	345℃	595℃	650℃	600℃	560℃
耐最低温度 Min. Enduring Temperature	-29℃	-46℃	-29℃	-29℃	-196℃	-40℃
适用工作温度 Applicable Work Temperature	≤425℃	≤345℃	≤595℃	≤650℃	≤600℃	≤560℃

通风蝶阀
Aeration Butterfly Valve

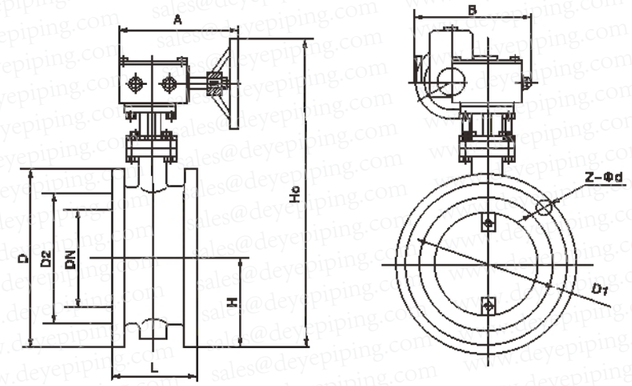

主要连接尺寸Main Connection Dimensions

单位Unit:mm

公称通径 Nominal Diameter (mm)		结构长度(标准值) Face to Face Dimension (Standard)	外形尺寸(参考值) External Dimension(Consult)				连接尺寸(标准值) Connection Dimension(Standard)					
							0.05MPa和0.25MPa			0.6MPa		
mm	inch	L	H	H0	A	B	D	D1	Z-Φd	D	D1	Z-Φd
50	2	108	70	418	250	225	140	110	4-14	140	110	4-14
65	21/2"	112	80	438	250	225	160	130	4-14	160	130	4-14
80	3	114	95	466	250	225	190	150	4-18	190	150	4-18
100	4	127	105	486	250	225	210	170	4-18	210	170	4-18
125	5	140	120	516	325	245	240	200	8-18	240	200	8-18
150	6	140	132	541	325	245	265	225	8-18	265	225	8-18
200	8	152	160	779	325	245	320	280	8-18	320	280	8-18
250	10	165	187	836	363	313	375	335	12-18	375	335	12-18
300	12	178	220	901	363	313	440	395	12-22	440	395	12-22
350	14	190	245	954	363	313	490	445	12-12	490	445	12-22
400	16	216	270	1003	363	313	540	495	16-22	540	495	16-22
450	18	222	297	1058	465	439	595	550	16-22	595	550	16-22
500	20	229	322	1111	546	556	645	600	20-22	645	600	20-22
600	24	267	377	1233	546	556	755	705	20-26	755	705	20-26
700	28	292	430	1338	546	556	860	810	24-26	860	810	24-26
800	32	318	487	1452	546	556	975	920	24-30	975	920	24-30
900	36	330	537	1588	632	706	1075	1020	24-30	1075	1020	24-30
1000	40	410	587	1689	632	706	1175	1120	28-30	1175	1120	28-30
1200	48	470	702	1938	632	706	1375	1320	32-30	1405	1340	32-33
1400	56	530	782	2670	790	1338	1575	1520	36-30	1630	1560	36-36
1600	64	600	895	2810	868	1476	1790	1730	40-30	1830	1760	40-36
1800	72	670	995	3020	868	1476	1990	1930	44-30	2045	1970	44-39
2000	80	760	1095	3220	965	1600	2190	2130	48-30	2265	2180	48-42

对夹式软密封蝶阀
Wafer Soft Seated Butterfly Valve

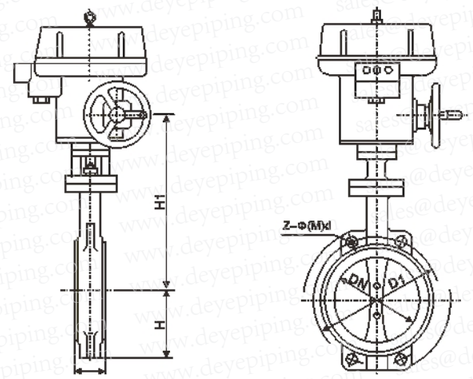

主要连接尺寸 Main Connection Dimensions

单位Unit:mm

公称通径 Nominal Diameter		主要尺寸 Main Dimension			0.25MPa~0.6MPa			1.0MPa			1.6MPa		
mm	Inch	L	H	H1	D1	Z-Φ(M)d	a	D1	Z-Φ(M)d	a	D1	Z-Φ(M)d	a
D71、D371、D671、D971(X.J)													
50	2	43	80	160	110	4-14	45°	125	4-18	45°	125	4-18	45°
65	21/2"	46	88	175	130	4-14	45°	145	4-18	45°	145	4-18	45°
80	3	46	96	180	150	4-18	22° 30'	160	4-18	22° 30'	160	4-18	22° 30'
100	4	52	115	200	170	4-18	22° 30'	180	4-18	22° 30'	180	4-18	22° 30'
125	5	56	125	213	200	4-18	22° 30'	210	4-18	22° 30'	210	4-18	22° 30'
150	6	56	140	225	225	4-18	22° 30'	240	4-23	22° 30'	240	4-23	22° 30'
200	8	60	175	260	280	4-18	22° 30'	295	4-23	22° 30'	295	4-23	15°
250	10	68	202	290	335	4-18	15°	350	4-23	15°	355	4-25	15°
300	12	78	242	330	395	4-23	15°	400	4-23	15°	410	4-25	15°
350	14	78	266	360	445	4-23	11° 15'	460	4-23	11° 15'	470	4-25	11° 15'
400	16	102	298	390	495	4-23	11° 15'	515	4-25	11° 15'	525	4-30	11° 15'
450	18	114	315	710	550	4-23	9°	565	4-25	9°	585	4-30	9°
500	20	127	348	430	600	4-23	9°	620	4-25	9°	650	4-34	9°
600	24	154	400	490	705	4-25	9°	725	4-30	9°	770	4-41	9°
700	28	165	520	550	810	4-25	7° 30'	840	4-M27	7° 30'	840	4-M36	7° 30'
800	32	190	591	610	920	4-30	7° 30'	950	4-M30	7° 30'	950	4-M36	7° 30'
900	36	203	680	680	1020	4-M27	6° 26'	1050	4-M30	6° 26'	1050	4-M36	6° 26'
1000	40	216	670	730	1120	4-M27	6° 26'	1160	4-M30	6° 26'	1170	4-M42	6° 26'
1200	48	254	780	835	1340	4-M30	5° 38'	1380	4-M36	5° 38'	1390	4-M45	5° 38'
1400	56	279	950	985	1560	4-M33	–	–	–	–	–	–	–

法兰式软密封蝶阀
Flange Soft Seated Butterfly Valve

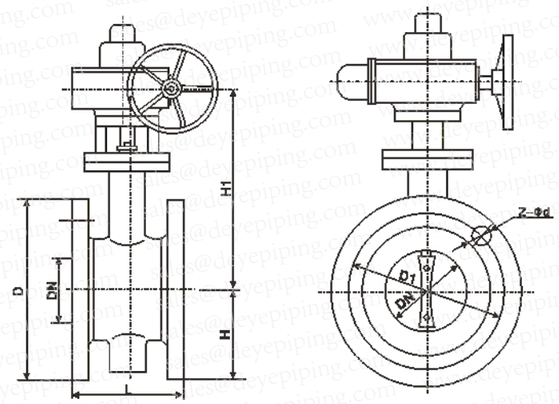

主要连接尺寸 Main connection dimensions

单位Unit:mm

公称通径 Nominal Diameter		主要尺寸 Main Dimension			0.25MPa~0.6MPa			1.0MPa			1.6MPa		
mm	Inch	L	H	H1	D	D1	Z-Φd	D	D1	Z-Φd	D	D1	Z-Φd
D41、D341、D641、D941(X.J)													
80	3	114	115	235	185	150	4-18	195	160	4-18	195	160	8-18
100	4	127	120	240	205	170	4-18	215	180	8-18	215	180	8-18
125	5	140	130	270	235	200	8-18	245	210	8-18	245	210	8-18
150	6	140	150	300	260	225	8-18	280	240	8-23	280	240	8-23
200	8	152	180	300	315	280	8-18	335	295	8-23	335	295	12-23
250	10	250	220	400	370	335	12-18	390	350	12-23	405	355	12-25
300	12	270	250	410	435	395	12-23	440	400	12-23	460	410	12-25
350	14	290	270	460	485	445	12-23	500	460	16-23	520	470	16-25
400	16	310	290	510	535	495	16-23	565	515	16-25	585	525	16-30
450	18	330	320	560	590	550	20-23	615	565	20-25	640	585	20-30
500	20	350	360	590	640	600	20-23	670	620	20-25	705	650	20-34
600	24	390	390	680	755	705	20-25	780	725	20-30	840	770	20-41
700	28	430	460	780	860	810	24-25	895	840	24-30	910	840	24-41
800	32	470	530	850	975	920	24-30	1010	950	24-34	1020	950	24-41
900	36	510	570	920	1075	1020	24-30	1110	1050	28-34	1120	1050	28-41
1000	40	550	630	990	1175	1120	28-30	1220	1160	28-34	1255	1170	28-48
1200	48	630	750	1115	1400 1375	1340 1320	32-34 32-30	1450	1380	32-41	1485	1390	32-54
1400	56	710	850	1228	1620 1575	1560 1520	36-34 36-30	1675	1590	36-48	–	–	–
1600	64	790	990	1340	1820 1785	1760 1730	40-34 40-30	1915	1820	40-54	–	–	–
1800	72	870	1100	1570	2045 1985	1970 1930	44-41 44-30	2115	2020	44-54	–	–	–
2000	80	950	1170	1680	2265 2185	2180 2130	48-48 48-30	2325	2230	46-54	–	–	–

高性能蝶阀(对夹式) High Performance Butterfly valve (Wafer Type)

一般的高性能蝶阀为单偏心或双偏心结构。双偏心结构是在设计时将阀轴偏离密封面中线，形成第一个偏心；轴稍稍离管路中心线，形成第二个偏心，偏心的目的在于使蝶阀开至大约20° 之后，阀座与密封圈之间脱离，从而减少摩擦。

High performance butterfly valve usually adopts single eccentric or double eccentric structure.The first eccentricity is that shaft deviates from centerline of sealing surface. The second eccentricity is that shaft deviates from centreline of the pipe. Eccentricity aims to reduce the friction between the seal ring and seat after the valve opens to 20° .

软密封阀座选用TFE、PTFE、RTFE，防火结构符合API607的火烧试验，在发生火灾时具有密封能力。

硬密封结构具有本质的防火能力，可保持双向无泄漏。可在不拆蝶板、阀杆的情况下更换阀座，上下阀杆处没有低摩擦系数的轴套，减少了阀门启闭时阀杆的摩擦力。

双偏心的设计结构，减少了开启频繁的密封副上下两端的磨损

阀门与驱动装置接口符合ISO5211，产品质量严格按ISO5211进行控制。

Soft seat which adopts TFE, PTFE and RTFE, also has good sealing when the fire occurs, because fireproof structure suits for the fire test according to API607.

Metal Sealing structure has the entitative fireproof ability, it can assure the zero leakage of bidirection. Seat can be replaced when the shaft and the disc aren't dismantled. There's no low friction coefficient bush bearing at up and bottom shafts, so the friction is reduced when the valve is opening and closing.

Double eccentric structure decreases the damage of secondary sealing when the valve is opening or closing frequently.

The interface of the valve and the driving mechanism is suitable for ISO5211, and the quality of product is controlled seriously according to ISO5211.

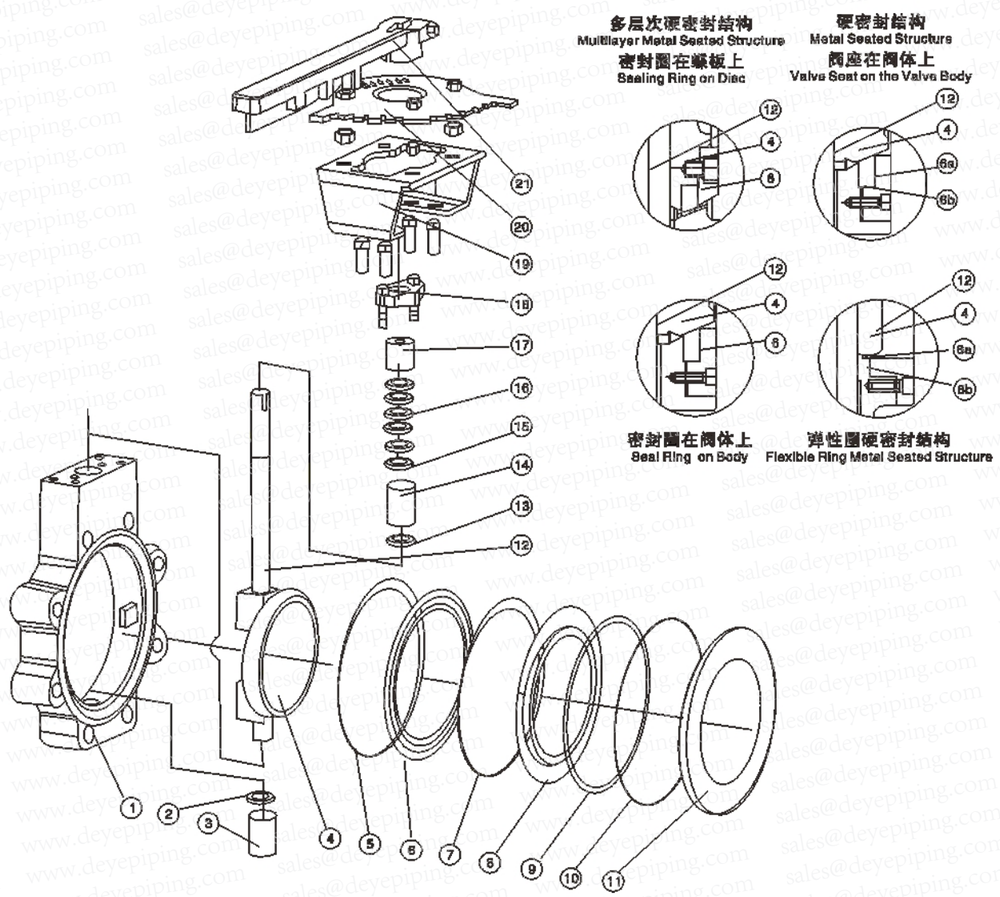

阀座密封原理 Sealing Principle of Seat

1、蝶板处于关闭状态，介质从阀座上游进入，在介质力的作用下，密封圈紧贴蝶板密封面，由于密封圈的弹性和变形作用，保证密封副的密封。

2、蝶板处于关闭状态，介质由阀座下游进入，在压板上下挤压下，密封圈克服介质的作用力，紧贴蝶板密封面，保证密封副的密封。

1.The disc is under closing, media enters from the upstream of seat, as media's action of force, seal ring clings to seal surface because of seal ring's resilience and deformation effect to assure the secondary has a good sealing.

2.The disc is under closing, media enters from the downstream of seat, as pressure plate extrudes up and down, seal ring covers the media's force action, and clings to the seal surface to assure the secondary has a good sealing.

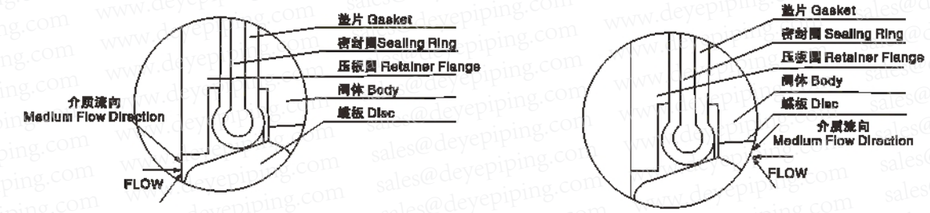

主要零件材质 Material for Main Parts

序号 NO.	零件名称 Part Name	材料 Material	可选材料 Optional Materials
1	阀体 Body	铸钢 Cast steel	不锈钢、蒙乃尔 Stainless Steel, Monel
2	调整垫A Adjusting pad A	不锈钢 Stainless steel	不锈钢、蒙乃尔 Stainless Steel, Monel
3	下轴套 Bottom Bushing	聚四氟乙烯+黄铜 PTFE + Brass	自润滑黄铜 Self lubricating Brass
4	蝶板 Disc	铸钢 Cast Steel	不锈钢、蒙乃尔 Stainless Steel, Monel
5	垫片 Gasket		
6	密封圈 Seal Ring	PTFE/PTFE+SS	SS+柔性石墨 SS+Flexible graphite
6a	阀座 Seat	碳钢 Carbon steel+13Cr	不锈钢、蒙乃尔 Stainless Steel, Monel
6b	垫片 Gasket	柔性石墨 Flexible graphite	
6c	密封圈 Sealing ring	不锈钢 Stainless Steel	–
6d	垫片 Gasket	柔性石墨 Flexible Graphite	
7	垫片 Gasket	柔性石墨 Flexible Graphite	
8	防火圈 Fire Safe Ring	不锈钢 Stainless Steel	–
9	垫片 Gasket	柔性石墨 Flexible Graphite	
10	挡圈 Ring	NBR	FPM
11	压板圈 Retainer Flange	碳钢 Carbon Steel	不锈钢、蒙乃尔 Stainless Steel, Monel
12	阀杆 Stem	不锈钢 Stainless Steel	不锈钢、蒙乃尔 Stainless Steel, Monel
13	调整垫 Adjusting Pad	不锈钢 Stainless Steel	不锈钢、蒙乃尔 Stainless Steel, Monel
14	上轴套 Upper Bushing	聚四氟乙烯+黄铜PTFE + Braas	自润滑黄铜 Self lubricating brass
15	填料垫 Packing	不锈钢 Stainless Steel	不锈钢、蒙乃尔 Stainless Steel, Monel
16	填料 Packing	柔性石墨 Flexible graphite	PTFE
17	填料压套 Packing Gland	碳钢 Carbon steel	不锈钢 Stainless Steel
18	填料压板 Packing Plate	不锈钢 Stainless steel	不锈钢 Stainless Steel
19	连接支架 Connecting Bracket	碳钢 Carbon steel	–
20	限位板 Limit Plate	碳钢 Carbon steel	不锈钢 Stainless Steel
21	手柄 Handle	碳钢 Carbon steel	–

提示：1、壳体材料压力温度等级表见附录F
2、壳体材料化学成分及力学性能见附录G
3、内件材料及推荐服务范围见附录E

Tips: 1, shell material pressure temperature rating table in Appendix F
2, the material chemical composition and mechanical properties of the shell see Appendix G
3, in a range of materials and services recommended in Appendix E

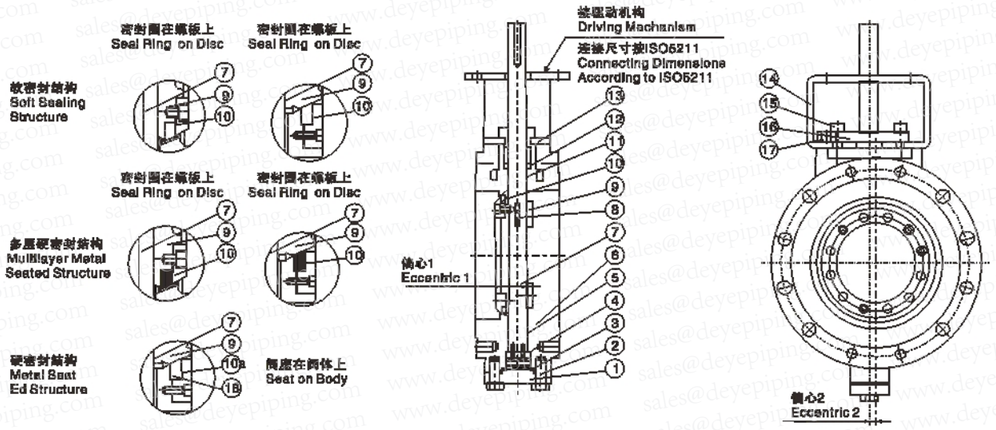

主要连接尺寸 Main Connection Dimensions

单位Unit:mm

序号 NO.	零件名称 Part Name	材料 Material Science	可选材料 Optional Materials
1	底盖 Bottom Cover	碳钢 Carbon Steel	不锈钢、蒙乃尔 Stainless Steel, Monel
2	螺栓 Bolt	合金钢 Alloy Steel	不锈钢、蒙乃尔 Stainless Steel, Monel
3	垫片Gasket	柔性石墨 Flexible Graphite	
4	调整垫 Adjusting Pad	不锈钢 Stainless Steel	不锈钢、蒙乃尔 Stainless Steel, Monel
5	下轴套 Down Bushing	聚四氟乙烯+黄铜 PTFE + Brass	自润滑黄铜 Self lubricating Brass
6	阀体 Body	铸钢 Cast Steel	不锈钢、蒙乃尔 Stainless Steel, Monel
7	阀杆 Stem	不锈钢 Stainless Steel	不锈钢、蒙乃尔 Stainless Steel, Monel
8	键 Key	不锈钢 Stainless Steel	不锈钢、蒙乃尔 Stainless Steel, Monel
9	蝶板 Disc	铸钢 Cast Steel	不锈钢、蒙乃尔 Stainless Steel, Monel
10	密封圈 Sealing Ring	PTFE/PTFE+SS	MBR/SS+柔性石墨 MBR/SS+Flexible Graphite
10a	阀座 Seat	碳钢 Carbon steel+13Cr	不锈钢、蒙乃尔 Stainless steel, Monel
11	上轴套 Upper Bushing	聚四氟乙烯+黄铜 PTFE + Brass	自润滑黄铜 Self lubricating Brass
12	填料垫 Packing	不锈钢 Stainless Steel	不锈钢、蒙乃尔 Stainless Steel, Monel
13	填料 Packing	柔性石墨 Flexible Graphite	PTFE
14	连接支架 Connecting Bracket	碳钢 Carbon Steel	–
15	螺栓 Bolt	合金钢 Alloy Steel	不锈钢、蒙乃尔 Stainless Steel, Monel
16	填料压板 Packing Plate	碳钢 Carbon Steel	不锈钢 Stainless Steel
17	螺栓 Bolt	合金钢 Alloy Steel	不锈钢、蒙乃尔 Stainless Steel, Monel
18	垫片 Gasket	柔性石墨 Flexible Graphite	

提示：1、壳体材料压力温度等级表见附录F
2、壳体材料化学成分及力学性能见附录G
3、内件材料及推荐服务范围见附录E

Note:1.The class of valve body's material pressure and temperature on Appendix F.
2. The chemical composition and mechanical property of valve body on Appendix G.
3.Trim material and supplying service range on Appendix E.

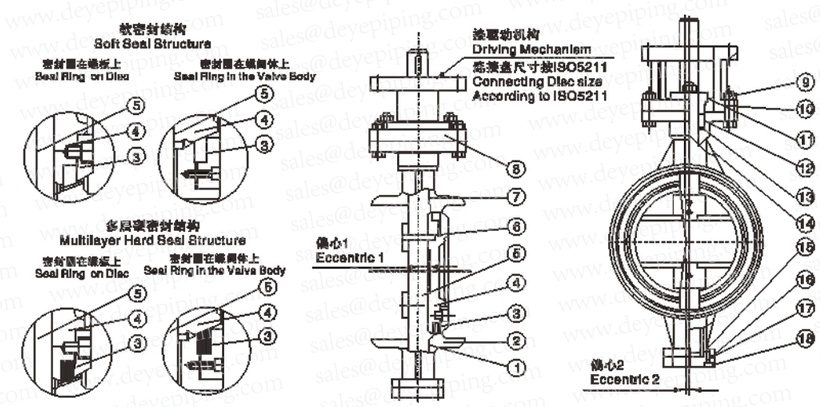

主要连接尺寸 Main Connection Dimensions

单位Unit:mm

序号 NO.	零件名称 Part name	材料 Material Science	可选材料 Optional Materials
1	下轴套 Down Bushing	聚四氟乙烯+黄铜 PTFE + Brass	自润滑黄铜 Self lubricating Brass
2	阀体 Body	铸钢 Cast Steel	不锈钢、蒙乃尔 Stainless Steel, Monel
3	密封圈 Seal Ring	聚四氟乙烯+黄铜 PTFE + Brass	MBR/SS+柔性石墨 MBR/SS+Flexible Graphite
4	蝶板 Disc	铸钢 Cast Steel	不锈钢、蒙乃尔 Stainless Steel, Monel
5	阀杆 Stem	不锈钢 Stainless Steel	不锈钢、蒙乃尔 Stainless Steel, Monel
6	销 Pin	不锈钢 Stainless Steel	不锈钢、蒙乃尔 Stainless Steel, Monel
7	上轴套 Upper Bushing	聚四氟乙烯+黄铜 PTFE + Brass	自润滑黄铜 Self Lubricating Brass
8	连接支架 Connecting Bracket	碳钢 Carbon Steel	–
9	螺母 Nut	碳钢 Carbon Steel	合金钢 Alloy Steel
10	螺栓 Bolt	合金钢 Alloy Steel	不锈钢、蒙乃尔 Stainless Steel, Monel
11	填料压板 Packing Plate	碳钢 Carbon Steel	不锈钢 Stainless Steel
12	填料 Packing	柔性石墨 Flexible Graphite	PTFE
13	填料垫 Packing Gasket	不锈钢 Stainless Steel	不锈钢、蒙乃尔 Stainless Steel, Monel
14	上轴套 Upper Bushing	聚四氟乙烯+黄铜 PTFE + Brass	自润滑黄铜 Self Lubricating Brass
15	对开圆环 Cutting Ring	不锈钢 Stainless Steel	不锈钢、蒙乃尔 Stainless Steel, Monel
16	螺栓 Bolt	合金钢 Alloy Steel	不锈钢、蒙乃尔 Stainless Steel, Monel
17	垫片 Gasket	柔性石墨 Flexible Graphite	
18	底盖 Bottom Cover	碳钢 Carbon Steel	不锈钢 Stainless Steel

提示：1、壳体材料压力温度等级表见附录F
2、壳体材料化学成分及力学性能见附录G
3、内件材料及推荐服务范围见附录E

Note:1.The class of valve body's material pressure and temperature on Appendix F.
2. The chemical composition and mechanical property of valve body on Appendix G.
3.Trim material and supplying service range on Appendix E.

液控蝶阀
Hydraulic Control Butterfly Valve

HBD7(B、S、X、XS)41X(H)

用途及特点Purpose and Characteristic

液控缓闭止回蝶阀是目前国内外较先进的管理控制设备，主要安装于水电站水轮机进口，用作水轮机进口阀；或安装于水利、电力、给排水等各类泵站的水泵出口，替代止回阀和闸阀的功能。工作时，阀门与管道主机配合，按照水力过渡过程原理，通过预设的启闭程序，有效消除管路水锤，实现管路的可靠截止，起到保护管路系统安全的作用。

本公司生产的液控缓闭止回蝶阀流阻系数小、智能化程度高、功能齐全、性能稳定可靠，是我公司设计人员在广泛搜集、研究、总结国内外同类产品性能的基础上，引入阀门、液压、电气等行业的多项研究成果，厚积而薄发，开发出来的新一代智能化高效节能产品。公司技术力量雄厚，并可根据用户的特殊要求单独进行设计，多方位满足广大用户对该类产品的需要。

该产品主要有如下特点：

1、可取代水泵出口处原电动闸阀和止回阀的功能，且机、电、液系统集成为一个整体，减少占地面积及基建投资。

2、电液控制功能齐全，无需另外配置即可以作为一个独立的系统单机就地调试、控制；也可以作为集散性控制系统(DCS)的一个设备单元，通过I/O通道由中央计算机进行集中管理，与水泵、水轮机、旁通阀及其他管道设备实现联动操作；并配有手动功能，无动力电源时也可以实现手动开、关阀，满足特殊工况下的阀门调试、控制要求。

3、可控性好，调节范围大、适应性强。电液控制系统设有多处调节点，可以按不同的管道控制要求进行启闭程序设置，保证在满足开、关阀条件时，阀门能够且才能够自动按预先设定的时间、角度开启和分快、慢二阶段关闭。并能实现无电关阀，有效消除破坏性水锤，防止水泵和水轮机组飞逸事故的发生，降低管网系统的压力波动，保障设备的安全可靠运行。

4、主阀密封副为三偏心金属或双偏心橡胶密封结构，启闭轻松、密封可靠；并有一道额外加大的偏心，使阀门具有良好的自关闭、自密封性能。中、小口径蝶板设计面双平板桁架式结构，排挤小、水流平顺，阀门流阻系数仅为0.1~0.6，远小于止回阀的流阻系数(1.7~2.6)，节能效果明显。

The hydraulic slow-closing check butterfly valve is more advanced managing and control equipment in the world at present. It is mainly used as hydroturbine inlet valve which is installed at hydropower station, or replacing the functions of check valves and gate valves, installed as pump outlet at various pump stations, such as irrigation, electric power and water supply and drainage. In working time, valves cooperating with pipeline main engine achieve pipeline's reliable cutting off and effectively protect the pipeline system from pipeline water hammer through presupposed procedure of opening and closing.

The hydraulic slow-closing check butterfly valve is based on that our designers empolder new intelligent, high-effect and energy-saving products, widely searching, studying and concluding same type products' performance, adopted various industries research results, such as valve, hydraulic pressure and electricity, etc. Our products are characterised by small flow-resistance, high intelligence, comprehensive functions and reliable performance. Our company can design on customers' special requirements through our strong tech strength to satisfy the customers' demands.

The main characteristics of the valves are as below:

1.It can replace the function of the electric gate valve and check valve at water pump outlet, and reduce the footprint area and initial cost because the systems of electricity, liquid and machinery integrate one part.

2.Products have comprehensive functions of electric and hydraulic control, can finish local adjustment and control independently; also can be an equipment unit of Distributed Control System(DCS), can achieve linkage operation with water pump, hydroturbine, by-pass valve and other pipeline equipments by centre computer managing integrately through I/O channel.

3.Products have good controllability, great adjustable range and strong applicability. The electric and hydraulic control system is designed as many adjust points, and it can set up the procedure of opening and closing according to the different pipe control requirements, to assure the valve can open automatically according to the presupposed time and angle and close as fast or slow two stages when the condition satisfies opening and closing the valve. It can be achieved that close the valve without electricity to assure the equipment word reliably. It can effectively eliminate destructive water hammer, prevent the runaway accident of the pump and hydroturbine, and reduce the pressure fluctuation of pipe network system.

4.The secondary sealing of main valve is triple offset metal sealing or double eccentric rubber sealing structure. It is easily opening and closing, and sealing is reliable. There's an extra increasing eccentricity to make the valve have good self-sealing and closing automatically. Middle and small size disc design and double flat trussed construction make the valve little supplant and the flow smooth. The effect of energy-saving is obvious, the valve flow-resistance coefficient is only 0.1~0.6, far from the check valve flow-resistance coefficient(1.7~2.6).

液控蝶阀
Hydraulic Control Butterfly Valve

主要性能规范 Main Performance Specification

产品标准 Product Standard	GB/T 14478-1993、GB/T 12238-1989、JB/T 8527-1997	
传动装置 Transmission Device	JB/T 5299-1998	
结构长度 Face to Face Length	GB/T 12221-2005	
配管法兰 Pipe Flange	灰铸铁法兰 Grey Iron Flange	GB/T 17241.6-1998
	球墨铸铁法兰 Ductile Iron Flange	GB 12380.1~12380.3-1990
	钢制法兰 Steel Flange	GB/T 9112~6124-2000
蓄能器标准 Accumulator Standard	GB/T 2352-2003	
试验与检验 Test and Inspection	GB/T 14478-1997、GB/T 13927-1992	
质量保证 QA	ISO9001：2000	

注Note：可采用其他有关标准和国外标准，法兰尺寸可按用户要求制造，但应在订货合同中写明。Note:It can adopt other relevant standards and foreign standards, and flange dimension can be manufactured according to user requirements, but it should be stated in the ordering contract .

主要技术参数Main Technology Parameter

公称通径DN(mm) Nominal Diameter		150~4000
公称压力PN(MPa) Nominal Pressure		0.25~4.0
试验压力 Test Pressure PS(MPa)	密封 Seal	1.1×PN
	强度 Strength	1.5×PN
工作压力(MPa) Working Pressure		≤1.0×PN
介质温度(℃) Medium Temperature		≤80
适用介质 Applicable Medium		清水、海水、泥沙水、油品等 Water, Sea water, Sediment, Oil etc.

注：1、1MPa=10.2kgf/cm²；　2、用于水电站时，密封试验压力可按电站最高静水头计算值。For the hydropower station, the sealing test pressure can be calculated according to the maximum hydrostatic head power station.

启闭参数Opening and Closing Parameters

公称通径 Nominal diameter		<1000	≥1000
开阀时间(可调) Valve opening time (adjustable)		10~16秒(S)	20~120秒(S)
关阀时间(可调) Valve closing time (adjustable)	快关 Quick Closing	3.5~15秒(S)	4~30秒(S)
	慢关 Slow Closing	5~60秒(S)	8~90秒(S)
关阀角度(可调) Valve Closing angle (Adjustable)	快关 Quick Closing	70±10°	70±10°
	慢关 Slow Closing	20±10°	70±10°
全开位最小流阻系数 Open a Minimum Flow Resistance Coefficient		0.1	

主要零件材质Material for Main Parts

零件名称 Part Name	材料 Material
阀体 Body	灰铸铁、球墨铸铁、碳素钢、镍铬铸铁 Grey Iron, Ductile Iron, Carbon Steel, Nickel Chromium Cast Iron
蝶板 Disc	灰铸铁、球墨铸铁、碳素钢、镍铬铸铁 Grey Iron, Ductile Iron, Carbon Steel, Nickel Chromium Cast Iron
阀轴 Shaft	不锈钢、碳素钢 Stainless Steel, Carbon Steel
阀体密封面 Sealing Surface Of The Valve Body	铜合金、不锈钢 Copper Alloy, Stainless Steel
蝶板密封圈 Disc Seal Ring	优质丁腈橡胶、不锈钢/柔性石墨层叠 High Quality Rubber, Stainless Steel / Graphite Layers
滑动轴承 Sliding Bearing	铜合金 Copper Alloy
填料 Packing	V形密封圈、柔性石墨 V Shaped Sealing ring, Flexible Graphite
墙板 Wallboard	碳素钢 Carbon Steel

产品结构说明 Products Structure Description

产品按照控制系统蓄能类型分为重锤式和蓄能器式两大系列，其中重锤式控制系统又分为普通重锤式、自动保压重锤式(B)和锁定型自动保压重锤式(S)；蓄能器式控制系统则分为普通蓄能器式(X)和锁定型蓄能器式(XB)。

阀门主要由阀门本体、传动机构、液压站、电控箱等四部分组成。

阀门本体由阀体、蝶板、阀轴、滑动轴承、密封组件等主要零件组成。

重锤式阀体均采用卧式结构，阀轴采用半轴结构。

蓄能器式一般采用卧式布置；也可根据用户要求采用立式布置。

传动机构主要由液压缸、摇臂、支撑墙板(重锤式还有重锤、杠杆、锁定油缸等)等连接、传动件组成，是液压动力开、关阀门的主执行机构。

传动液压缸上设有快关时间调节阀、慢关时间调节阀和快、慢关角度调节阀。调节范围见第五节<启闭参数>。

卧式布置时，传动机构一般采用正向安装；受现场空间限制时也可根据用户要求采用反装型。

液压站包括油泵机组，手动泵、蓄能器、电磁阀、溢流阀、流量控制阀、截止阀、液压集成块、油箱等零部件。

重锤式自动保压系统中、蓄能器用作系统压力的补偿。

锁定型重锤式自动保压系统中，蓄能器作系统压力的补偿和锁定油缸的退锁蓄能器式系统中，蓄能器为阀门启闭提供主动力源。

流量控制阀用于开阀时间调节，调节范围见第五章<启闭参数>。

手动泵用于系统调节和特殊工况下的阀门启闭。

液压系统电磁换向阀控制特征一般为正作用型，即；电磁阀得电蝶阀开阀、失电蝶阀开关。；反之则为反作用型，即电磁阀失电蝶阀开阀、得电蝶阀关阀。常规配套用作水轮机进口阀时电磁换向阀为反作用型，其余工况采用正作用型，如有不同选择应在订货时说明。

液压系统与阀门本体可以是整体式安装，也可以分开安装。用户未作特殊说明时为整体式安装。蓄能器式采用立式布置时均为分体式安装。

Products in accordance with the control system energy storage type can be divided into two series: heavy hammer type and accumulator type. Heavy hammer control system is divided into ordinary heavy hammer, automatic pressure hammer type (B) and lock automatic pressure (S). Accumulator control system is divided into ordinary accumulator type (X) and lock type accumulator type (XB).

Valve is mainly composed of four parts: valve body, transmission, hydraulic station, electric control box.

Valve body is composed of body, disc, shaft, sliding bearings, sealing components and other major components.

The body of heavy hammer type valve adopts horizontal structure and the shaft adopt half axle structure.

Accumulator type valve generally adopts horizontal layout, which also can adopt vertical arrangement according to users' requirements.

Transmission mechanism is mainly composed of connections and transmission components, including the hydraulic cylinder, rocker, wall supporting (there are heavy hammer, lever, locked cylinder, etc. in heavy hammer type), which is the main valve actuator that hydraulic power open and close valve.

There are fast-closing time control valve, slow-off time control valve and fast-off & slow-off angle control valve on transmission hydraulic cylinder. The adjustment range is shown in Section 5 <Opening and closing parameters>.

As layout is horizontal, the transmission mechanism generally adopts positive installation. When limited by the space, it can also adopt anti-loaded type according to user requirements.

Hydraulic station includes oil pump unit, manual pump, accumulator, solenoid valve, relief valve, flow control valve, globe valve, hydraulic manifold, fuel tank and other parts.

In the automatic pressure maintaining system of heavy hammer type, the accumulator is used as compensation of the system pressure.

In lock-type heavy hammer automatic pressure maintaining system, the accumulator for the system pressure compensation and lock cylinder lockout accumulator system, the accumulator for the valve opening and closing to provide the main power source.

The flow control valve aims to adjust opening time of the valve, the adjustment range is shown in Section 5 <Opening and closing parameters>.

The manual pump is using to adjust the system and open and close the valve in the special working condition.

The solenoid directional valve in hydraulic system is in positive effect, the solenoid valve gets power, and the butterfly valve opens. If the solenoid directional valve in hydraulic system is in negative effect, the solenoid valve gets power, and the butterfly valve closes. All working condition adopts positive effect without as normal supporting turbine inlet valve. If have other choices, plz explain as ordering goods.

The hydraulic system and valve body connection can be installed as unitary and split. If the customer doesn't explain,it is installed as unitary. If the accumulator adopts veritical structure, it is installed as split.

电气控制方式说明 Electric Control Instruction

本阀电气控制系统按主逻辑元件类别分为普通继电型和PLC智能控制型。出厂配套一般为普通继电型，需PLC智能控制型应在订货时说明。

按液压系统类别分为普通型、B型、S型、X型、XS型等，每类中又分为离心泵、轴流泵和水轮机等使用工况。其中：

开阀离心泵(含离心式混流泵)工况：先启动泵，延迟预定时间后开阀，或泵阀同时启动。

开阀轴流泵(含轴流式混流泵)工况：先开阀至一定角度，再启动泵，或泵阀同时启动。

开阀水轮机工况：先开启旁通阀平衡压力，在开阀，后运行水轮机。

各种工况一般要求在管道主机停机或控制电源失电的同时关闭阀门；也可先关阀至一定角度，在联锁停泵，或将"管道主机停机"设计成阀门关闭的充要条件。

本阀电气控制系统均配有就地控制回路和远程联动控制回路。就地控制回路主要用于现场调试，正常工作时一般均使用远程联动控制回路。

系统动力电源为AC380V，控制电源可以是AC220V、DC220V、DC110V、DC24V或其它电源等级。

电液控制原理详细说明参看我公司各类液控蝶阀产品<安装使用说明书>。

The electric control system of the valve is divided into common relay type and PLC intelligent control type. Usually common relay type is matched before leaving the factory, plz explain in order if you need PLC intelligent control type.

According to the hydraulic system,the eclectric control system is divided into Ordinary type, B type,S type, X type and XS type,etc. In each type, there are many working conditions, such as centrifugal pemp, axial pump and hydrotubine.

Opening centrifugal pump valves(contain centrifugal mixed-flow pump) working condition: open the pump, and open the valve after delaying conserted time, or open the pump and the valve as the same time.

Opening axial pump valves(contain axiall mixed-flow pump) working condition: open the valve to a fixed angle, and open the pump, or open the pump and the valve at the same time.

Opening hydrotubine working condition: open the by-pass vavle to balance the pressure, and open the valve, finally open hydtoyubine.

It is required that close the valve meanwhile the pipeline's main engine doesn't work and the control power is out of supplying in any working condition, or close the valve as a fixed angle, and stop the pump interlockingly, or design the "pipeline main engine" as the valve closing's necessary and sufficient condition.

The electric control system of the valve is matched with local control circuit and remote linkage control circuit. Local control circuit uses to adjust at the live, normal work uses remote linkage control circuit.

用户订货时请详细说明主逻辑元件类别、液压系统类别、管道主机联动方式、换向阀控制特征、控制电源等级等具体使用工况条件。我公司可按用户的不同要求进行一定调整，并可根据用户特殊工况要求单独进行设计。

Customer should note detailed working condition, such as the type of main logic element and hydraulic system, pipeline main engine linkage method, the feature od reversing valve and control power class, etc.

Our company can adjust products according to customers' requirements,or design depending on unique working condition.

外形尺寸图Appearance Size Drawing

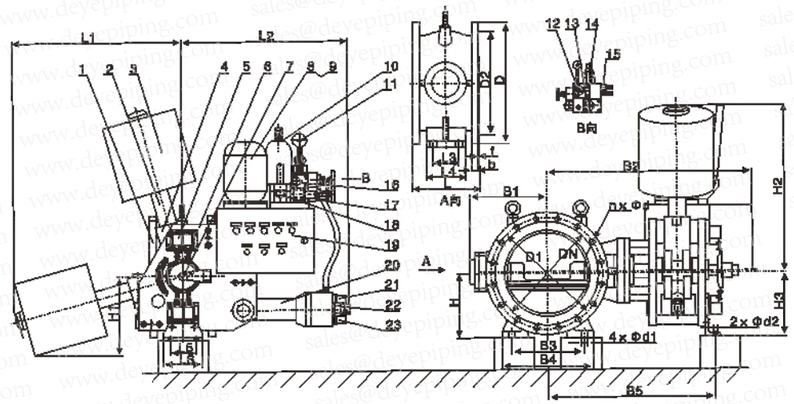

1、阀体 2、杠杆 3、重锤 4、摇臂 5、行程开关 6、蝶板 7、开度电位器 8、电机 9、油泵 10、蓄能器
11、耐震压力表 12、常开截止阀 13、常闭截止阀 14、电磁阀 15、压力开关 16、流量控制阀 17、溢流阀
18、手动泵 19、电气控制箱 20、油缸 21、快关调节阀 22、快慢角度调节 23、慢关调节阀
1、Body 2、Lever 3、Heavy Hammer 4、Rocker 5、Position Switch 6、Wallboard 7、Open Potentiometer 8、Motor 9、Oil Pump
10、Accumulator 11、Shock-resistant Pressure Guages 12、Normally Open Globe Valve 13、Normally Close Globe Valve
14、Solenoid Valve 15、Pressure Switch 16、Flow Control Valve 17、Relief Valve 18、Manual Pump 19、Electric Control Box
20、Hydrocylinder 21、Fast Closing Regulator 22、Fast-slow Angle Regulator 23、Slow Closing Regulator

图1 自动保压重锤式液控蝶阀止回蝶阀外形及连接尺寸图(DN≤500)

Figure 1 The Appearance and Connection Size of Automatic Pressure Heavy Hammer Hydraulic Closure Check Butterfly Valve (Dn≤500)

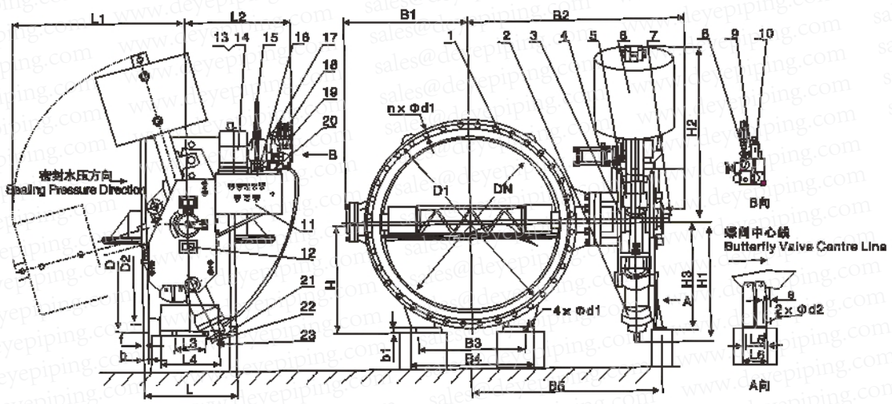

1、阀体 2、油缸 3、传动支架 4、摇臂 5、杠杆 6、重锤 7、开度电位器 8、常开截止阀 9、常闭截止阀
10、电磁阀 11、压力开关 12、行程开关 13、电机 14、油泵 15、蓄能器 16、手动泵 17、压力表
18、流量控制阀 19、溢流阀 20、电气控制箱 21、快关调节阀 22、慢关调节阀 23、快慢角度调节
1、Body 2、Hydrocylinder 3、Transmission Bracket 4、Rocker 5、Lever 6、Heavy Hammer 7、Open Potentiometer
8、Normally Open Globe Valve 9、Normally Close Globe Valve 10、Solenoid Valve 11、Pressure Switch 12、Position Switch
13、Motor 14、Oil Pump 15、Accumulator 16、Manual Pump 17、Piezometer 18、Flow Control Valve 19、Relief Valve
20、Electric Control Box 21、Fast Closing Regulator 22、Slow Closing Regulator 23、Fast-slow Angle Regulator

图2 自动保压重锤式液控蝶阀止回蝶阀外形及连接尺寸图(DN≥600)

Figure 2 The Appearance and Connection Size of Automatic Pressure Heavy Hammer Hydraulic Closure Check Butterfly Valve (Dn≥600)

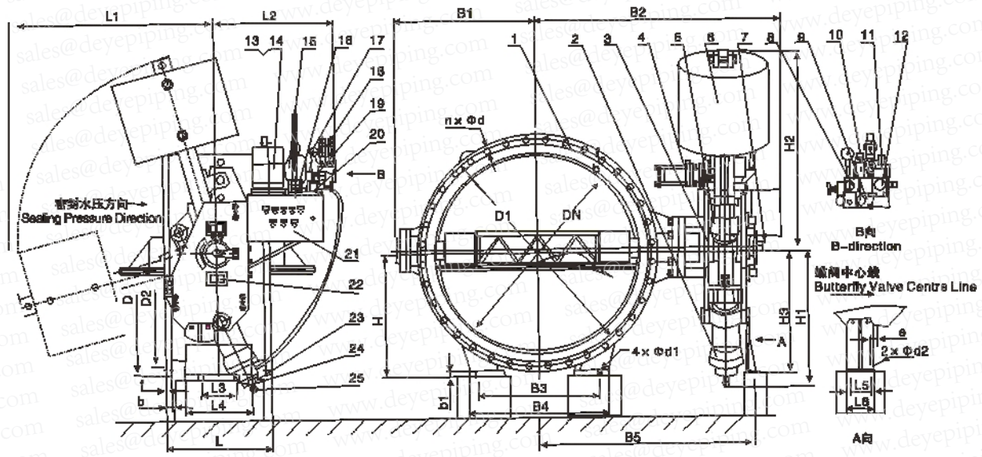

1、阀体 2、油缸 3、传动支架 4、锁定油缸 5、摇臂 6、重锤 7、开度电位器 8、常开蝶止阀 9、常闭蝶止阀(一)
10、主电磁阀 11、锁定电磁阀 12、常闭蝶止阀(二) 13、压力开关 14、油泵 15、电机 16、手动泵 17、压力表
18、压力表 19、流量控制阀 20、溢流阀 21、电气控制箱 22、行程开关 23、快关调节阀 24、慢关调节阀 25、快慢角度调节
1、Body 2、Hydrocylinder 3、Transmission Bracket 4、Locking Cylinder 5、Rocker 6、Heavy Hammer 7、Open Potentionmeter
8、Normally Open Globe Valve 9、Normally Close Globe Valve I 10、Main Solenoid Valve 11、Locking Solenoid Valve
12、Normally Close Globe Valve II 13、Pressure Switch 14、Oil Pump 15、Motor 16、Manual Pump
17、Piezometer 18、Piezometer 19、Flow Control Valve 20、Relief Valve 21、Electric Control Box 22、Position Switch
23、Fast Closing Regulator 24、Slow Closing Regulator 25、Fast-slow Angle Regulator

图3 自动锁定型自动保压重锤式液控缓闭止回蝶阀外形及连接尺寸
Figure 3 Outline Dimensions and Connection Dimensions of Automatic Lock and Automatic Pressure Heavy Hammer Hydraulic Control Slow-closing Butterfly Valve

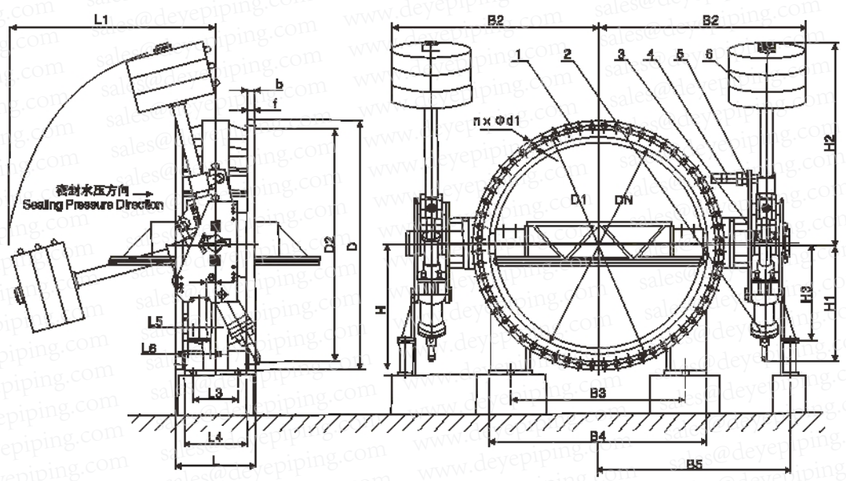

1、阀门 2、油缸 3、传动支架 4、摇臂 5、锁定油缸 6、重锤杠杆组件
1、Body 2、Hydrocylinder 3、Transmission Bracket 4、Rocker 5、Locking Cylinder 6、Heavy Hammer&Lever Unit

图4 自动保压双锤式液控缓闭止回蝶阀外形及连接尺寸
Figure 4 Outline Dimensions and Connection Dimensions of Automatic Pressure Double Hammer Hydraulic Control Slow-closing Butterfly Valve

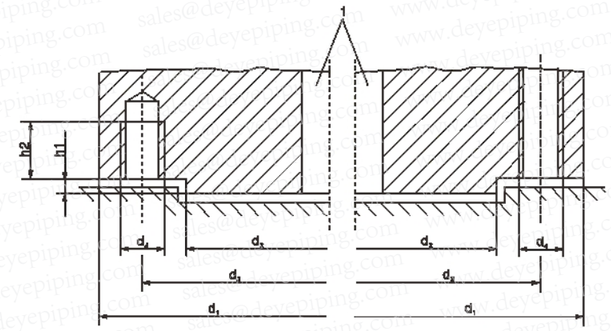

驱动装置与阀门的连接示意图部分回转执行器
The connection diagram of part of the rotary actuator and valve driving device

部分回转驱动装置的连接The Connection of Part of the Rotary Driving Device

部分回转阀门驱动装置是指对阀门产生角行程的驱动装置。该驱动装置和阀门连接的法兰尺寸和法兰代号与其相对应的最大转矩和驱动件的结构形貌和尺寸按GB/T12223---2005（Idt ISO5211:2001）《部分回转阀门驱动装置的连接》规定。

Part of the rotary valve driving device is a driving device of producing the valve angle stroke. The driving device and the valve connecting flange size, flange code, max corresponding torque, structure and morphology and size of driving units refer to GB/T122232005(idt ISO5211-2001) *The Connection of Part of Rotary Valve Driving Device*.

法兰代号——最大转矩 Flange Code -- Max Torque

法兰代号 Flange Code	F03	F04	F05	F07	F10	F12	F14	F16	F25	F30	F35	F40	F48	F60
最大转矩 Maximum Torque /N·m	32	63	125	250	500	1000	2000	4000	8000	16000	32000	63000	125000	250000

注：表中规定值是在螺栓拉伸应力只有390MPa且法兰接合面之间的摩擦系数为0.2的基础上确定的，不同的参数会得出不同的传输转矩值。
Note: Specified values in the sheet is based on bolts' tensile strength which is only 390 Mpa,and frictional coeffecient between flange joints is 0.2. Different parameters will calculate different torques.

驱动装置与阀门相连接的法兰尺寸 Connection Flange Size of Driving Device and Valve

单位Unit:mm

法兰代号 Flange Code	d1	d2(f8)	d3	d4	h1min	h2min	螺柱或螺栓数量 Number of Bolts&Bonnet
F03	46	25	36	M5	3	8	4
F04	54	30	42	M5	3	8	4
F05	65	35	50	M6	3	9	4
F07	90	55	70	M8	3	12	4
F10	125	70	102	M10	3	15	4
F12	150	85	125	M12	3	16	4
F14	175	100	140	M16	4	24	4
F16	210	130	165	M20	5	30	4
F25	300	200	254	M16	5	24	8
F30	350	230	298	M20	5	30	8
F35	415	260	356	M30	5	45	8
F40	475	300	406	M36	8	54	8
F48	560	370	483	M36	8	54	12
F60	686	470	603	M36	8	54	20

壳体最小壁厚 tm
Minium thickness of Shell(tm)

GB/T12224-2005 单位Unit:mm

口径 Size DN	公称压力PN Nominal pressure													
	16		25	40		63	100			160		320		
		20			50			110	150		260		420	760
6	3.0	3.0	3.0	3.0	3.0	3.0	3.0	3.0	3.3	3.3	3.8	4.2	4.8	7.6
10	3.0	3.0	3.0	3.0	3.0	3.1	3.3	3.3	3.6	3.8	4.3	5.2	5.8	10.1
15	3.0	3.0	3.0	3.1	3.1	3.2	3.3	3.3	4.1	4.3	4.8	6.2	6.9	12.7
20	3.0	3.0	3.4	3.7	3.8	4.2	4.3	4.5	5.1	5.3	6.1	7.4	8.9	17.5
25	4.0	4.1	4.2	4.6	4.8	4.8	4.8	4.8	6.4	6.4	7.1	8.7	11.2	22.3
32	4.8	4.8	4.8	4.8	4.8	4.8	4.8	4.8	6.6	6.9	8.6	10.8	13.5	26.9
40	4.8	4.8	4.8	4.8	4.8	5.0	5.7	5.8	7.4	7.6	9.9	12.6	15.7	32.0
50	5.5	5.6	5.7	6.0	6.3	6.3	6.3	6.4	7.9	8.3	11.7	14.7	20.1	42.4
65	5.5	5.6	5.7	6.2	6.4	7.0	7.1	7.1	9.1	9.8	14.5	18.5	24.1	52.3
80	5.6	5.6	6.1	6.7	7.1	7.9	8.1	8.1	10.7	11.5	16.8	22.3	29.0	62.2
90	5.8	6.4	6.7	7.1	7.4	7.7	8.4	8.6	11.9	12.6	19.1	24.2	32.8	72.4
100	6.2	6.4	6.6	7.3	7.9	9.1	9.4	9.7	13.0	13.4	21.1	26.7	37.3	82.3
125	6.6	7.1	7.4	8.1	8.6	9.2	10.8	11.2	16.0	16.9	25.9	33.4	46.0	102.1
150	6.8	7.1	7.5	8.8	9.7	10.4	12.2	12.7	18.8	19.9	30.7	39.7	54.6	122.2
175	7.2	7.6	8.1	9.5	10.4	11.3	13.8	14.5	21.1	22.4	35.8	46.3	63.8	142.0
200	7.7	7.9	8.5	10.1	11.2	12.2	15.2	16.0	23.6	25.1	40.4	52.2	71.9	162.0
225	7.9	8.4	9.0	10.7	11.9	13.2	16.6	17.8	26.2	27.9	44.7	58.1	80.5	181.9
250	8.1	8.6	9.3	11.3	12.7	14.2	18.5	19.6	28.7	30.6	49.3	64.3	89.2	201.9
275	8.5	9.1	9.8	12.0	13.5	15.3	20.3	21.6	31.5	33.5	53.8	70.3	97.8	221.7
300	9.1	9.7	10.5	12.7	14.2	16.2	21.9	23.4	34.3	36.5	58.7	76.6	106.4	241.8
325	9.5	10.2	11.1	13.7	15.5	17.5	23.1	24.6	37.1	39.5	63.5	82.7	114.8	261.6
350	9.9	10.7	11.7	14.6	16.5	18.6	24.6	26.2	39.6	42.2	68.3	89.0	123.4	281.7
400	10.5	11.4	12.5	15.8	18.0	22.6	28.0	30.0	45.0	48.0	77.7	101.3	140.7	321.6
450	11.2	12.2	13.5	17.3	19.8	22.7	31.1	33.3	49.8	53.2	86.9	113.8	158.5	361.4
500	11.9	13.0	14.4	18.5	21.3	24.7	34.5	37.1	55.1	58.8	96.3	126.1	175.8	401.3
550	12.5	13.7	15.3	20.0	23.1	26.8	37.5	40.4	61.0	65.0	105.4	138.3	193.0	441.2
600	13.4	14.7	16.4	21.3	24.6	28.7	40.1	43.7	66.3	70.7	115.1	150.9	210.3	481.1
650	14.0	15.5	17.3	22.8	26.4	30.9	43.6	47.0	71.6	76.4	124.5	163.2	227.6	521.0
700	14.8	16.3	18.2	24.0	27.9	32.9	47.0	50.8	77.0	82.1	133.6	175.4	245.1	560.8
750	15.3	17.0	19.1	25.5	29.7	35.0	50.0	54.1	82.0	87.5	143.0	187.8	262.4	600.7
800	16.2	18.0	20.2	26.8	31.2	36.9	53.3	57.7	87.4	93.3	152.4	200.1	279.7	640.6
850	16.9	18.8	21.2	28.3	33.0	39.1	56.3	61.0	92.7	99.0	161.8	212.5	296.9	680.5
900	17.6	19.6	21.1	29.7	34.8	41.2	59.6	64.5	98.0	104.7	171.2	224.8	314.2	720.3
950	18.2	20.3	23.0	31.0	36.3	43.5	62.8	68.1	103.4	110.4	180.6	237.2	331.5	760.2
1000	19.1	21.3	24.1	32.5	38.1	45.3	65.9	71.4	108.7	116.1	190.0	249.6	349.0	800.1
1050	19.8	22.1	25.0	33.8	39.6	47.2	69.0	74.9	114.0	121.8	199.4	262.0	366.3	840.0
1100	20.4	22.9	26.0	35.2	41.4	49.4	72.1	78.2	119.4	127.5	208.5	274.01	383.5	879.6
1150	21.0	23.6	26.9	36.7	43.2	51.6	75.4	81.8	124.7	133.2	217.9	286.5	400.8	919.5
1200	21.9	24.6	28.0	38.0	44.7	53.5	78.4	85.1	130.0	138.8	227.3	298.9	418.1	959.4
1250	22.6	25.4	28.9	39.5	46.5	55.6	81.6	88.6	135.1	144.3	236.7	311.3	435.6	999.2

三偏心蝶阀阀门扭矩值
Triple Eccentric Butterfly Valve Torque Value

三偏心蝶阀阀门扭矩值(NM) Triple Eccentric Butterfly Valve Torque Value 单位Unit:mm

公称尺寸 Nominal Size		公称压力PN/MPa Nominal pressure						CL		
		0.6	1.0	1.6	2.5	4.0	6.4	150	300	600
DN/mm	NPS/In	力矩/N.m Torque/N.m								
50	2	25	29	37	59	83	127	42	92	182
65	21/2	29	35	60	82	106	142	69	123	213
80	3	34	57	81	102	148	290	174	271	460
100	4	61	102	141	180	259	526	250	395	834
125	5	104	165	228	289	412	641	283	548	979
150	6	178	250	450	564	790	1060	473	825	2938
200	8	201	400	601	800	1201	1567	674	1503	3616
250	10	353	518	956	1250	1862	2697	983	1887	5649
300	12	635	992	1352	1711	2428	3147	2022	2508	11863
350	14	819	1623	2234	2844	4067	4855	2520	4158	14123
400	16	1047	1944	2842	3738	5533	6473	3175	6271	17061
450	18	1451	2451	3452	4412	6454	13450	4239	7864	21015
500	20	2043	3265	4527	5769	8253	16993	5531	10361	26551
600	24	2779	5548	6018	9495	13443	24586	6011	17559	38415
700	28	3080	6331	6890	14200	22720	–	10440	27923	–
750	30	3230	6723	7700	16552	26483	–	12654	33105	–
800	32	3912	7307	8760	19847	31755	–	14462	39696	–
900	36	5275	8474	9750	26438	36188	–	18078	52877	–
1000	40	6915	11717	13560	35553	44113	–	24179	71105	–
1050	42	8135	15253	16270	40110	51827	–	28457	80219	–
1200	48	12540	20563	23360	48900	61962	–	36155	–	–
1300	52	18300	21806	29977	–	–	–	–	–	–
1400	58	24650	28589	34900	–	–	–	–	–	–
1500	60	26440	36155	43397	–	–	–	–	–	–
1600	64	40850	43375	48600	–	–	–	–	–	–

高性能蝶阀参数扭矩表
High Performance Butterfly Valve Parameter Torque Table

高性能防火蝶阀扭矩值(仅供参考) High Performance Fireproof Butterfly Valve Torque Value(Reference)

规格 Specifications (mm)		压力等级 Pressure Rating									
DN	NPS	100PSI	150PSI	200PSI	285PSI	300PSI	400PSI	600PSI	740PSI	1200PSI	1480PSI
50	2"	–	–	–	–	–	–	–	–	–	–
65	2 1/2"	–	–	–	–	–	–	–	–	–	–
80	3"	67	–	87	107	116	134	147	179	215	256
100	4"	71	–	92	113	130	167	198	258	302	371
125	5"	130	–	169	228	–	–	–	–	–	–
150	6"	198	–	297	424	453	511	559	606	698	856
200	8"	463	–	531	593	680	870	1039	1314	1621	1909
250	10"	610	–	815	1037	1129	1297	1424	2271	2700	3175
300	12"	936	–	1328	1780	1907	2121	2288	3576	4221	5011
350	14"	1644	–	1743	1829	2754	3841	4604	5566	6335	7048
400	16"	1896	–	2154	2306	4576	6489	7828	9457	10767	11976
450	18"	2813	–	3017	3220	5491	7813	9439	11411	12993	14451
500	20"	3603	–	3888	4180	7698	11025	13355	16157	18383	20450
600	24"	5722	–	6168	6547	11784	16948	20495	24766	28190	31368
700	28"	6542	8022	–	–	–	–	–	–	–	–
50	30"	11570	10813	12349	13118	25376	37002	45137	–	–	–
800	32"	–	–	–	–	–	–	–	–	–	–
900	36"	16213	15139	17422	18292	–	–	–	–	–	–
1000	40"	–	–	–	–	–	–	–	–	–	–
1050	42"	18869	23727	–	–	–	–	–	–	–	–
1200	48"	33251	34121	36505	38618	–	–	–	–	–	–
1350	54"	–	39375	–	–	–	–	–	–	–	–

PTFE阀座扭矩值(仅供参考) PTFE Seat Torque Value(Reference)

规格 Specifications (mm)		压力等级 Pressure Rating								
		100	200	285	300	400	600	740	1200	1480
DN/mm	NPS/in	力矩 Moment /N.M								
50	2	27	33	37	40	48	59	70	83	130
65	2 1/2	31	39	46	47	55	71	82	95	142
80	3	43	54	64	66	77	100	115	133	199
100	4	83	111	134	138	166	222	261	305	333
125	5	125	167	202	208	250	333	391	458	700
150	6	188	250	304	313	375	500	588	687	718
200	8	363	476	572	589	702	929	1087	1268	1409
250	10	602	806	980	1010	1215	1623	1909	2236	2862
300	12	910	1250	1538	1589	1929	2609	3084	3628	4579
350	14	1052	1411	1715	1767	2127	2844	3346	4824	5357
400	16	131	1756	2133	2199	2640	3522	4139	8202	9124
450	18	1817	2488	3058	3159	3830	5172	6111	9893	11005
500	20	2501	3346	4065	4191	5037	6726	7910	13999	15569
600	24	3496	4698	5719	5900	7102	9505	11188	21467	23885
700	28	4130	6018	6870	8079	10668	15273	18500	–	–
750	30	4949	6678	8021	9169	12451	18157	22156	–	–
800	32	5292	7254	8731	–	–	–	–	–	–
900	36	5982	8408	10151	–	–	–	–	–	–
1000	40	8344	11208	14515	–	–	–	–	–	–
1050	42	9525	12609	16698	–	–	–	–	–	–
1150	46	13117	17873	22406	–	–	–	–	–	–
1200	48	14914	20506	25260	–	–	–	–	–	–
1300	52	17395	19896	–	–	–	–	–	–	–
1400	56	19676	22787	–	–	–	–	–	–	–
1500	60	21517	–	–	–	–	–	–	–	–
1600	64	25690	–	–	–	–	–	–	–	–

压力–温度等级
Pressure–Temperature Rating

钢制阀门压力——温度等级Steel Valve Pressure—Temperature Rating

阀门在各工作温度下的最大允许工作压力按下表确定。当工作温度为表中温度级中间值时，可用内插法决定最大允许工作压力。

Valves' max working pressure in working temp. refers to the below sheet. When the working temp. is a median, it's recommended that using interpolation to decide the max working pressure.

钢号 Steel No.	基准温度(℃) Basic Temperature(℃)	工作温度(℃) Working Temperature(℃)												
10、20、25 ZG200、ZG250	200	250	300	350	400	425	435	445	455	–	–	–	–	–
15CrMo ZG20CrMo	200	320	450	490	500	510	515	525	535	545	–	–	–	–
12Cr1MoV 15Cr1Mo1V ZG20CrMoV ZG15Cr1Mo1V	200	320	450	510	520	530	540	550	560	570	–	–	–	–
1Cr5Mo ZG1Cr5Mo	200	325	390	430	450	470	490	500	510	520	530	540	550	–
1Cr18Ni9Ti ZG1Cr18Ni9Ti 1Cr18Ni12MoTi ZG1Cr18Ni12MoTi	200	300	400	480	520	560	590	610	630	640	660	670	690	700

公称压力(MPa) Nominal Pressure	强度压力(MPa) Sheel Pressure	最大工作压力(MPa) Maximum Working Pressure													
0.1	0.2	1.10	0.09	0.08	0.07	0.06	0.06	0.05	0.05	–	–	–	–	–	–
0.25	0.4	0.25	0.22	0.20	0.18	0.16	0.14	0.12	0.11	0.01	0.09	0.08	0.07	0.06	0.06
0.6	0.9	0.60	0.56	0.50	0.45	0.40	0.36	0.32	0.28	0.25	0.22	0.20	0.18	0.16	0.14
1.0	1.5	1.0	0.90	0.80	0.70	0.64	0.56	0.50	0.45	0.40	0.36	0.32	0.28	0.25	0.22
1.6	2.4	1.6	1.4	1.25	1.1	1.0	0.90	0.80	0.70	0.64	0.56	0.50	1.45	0.40	0.36
2.6	3.8	2.5	2.2	2.0	1.8	1.6	1.4	1.25	1.1	1.0	0.9	0.80	0.70	0.64	0.56
4.0	6.0	4.0	3.6	3.2	2.8	2.5	2.2	2.0	1.8	1.6	1.4	1.25	1.1	1.0	0.90
6.4	9.6	6.4	5.6	5.0	4.5	4.0	3.6	3.2	2.8	2.5	2.2	2.0	1.8	1.6	1.4
10.0	15.0	10.0	9.0	8.0	7.1	6.4	5.6	5.0	4.5	4.0	3.6	3.2	2.8	2.5	2.2
16.0	24.0	16.0	14.0	12.5	11.2	10.0	9.0	8.0	7.1	6.4	5.6	5.0	4.5	4.0	3.6
20.0	30.0	20.0	18.0	16.0	14.0	12.5	11.2	10.0	9.0	8.0	7.1	6.4	5.6	5.0	4.5
25.0	38.0	25.0	22.5	20.0	18.0	16.0	14.0	12.5	11.2	10.0	9.0	8.0	7.1	6.4	5.6
32.0	48.0	32.0	28.0	25.0	22.5	20.0	18.0	16.0	14.0	12.5	11.2	10.0	9.0	8.0	7.1

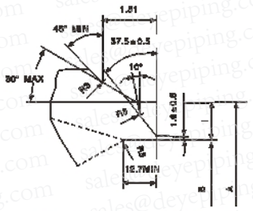

壁厚T在4.76–22.2焊接坡口尺寸
Weld Groove Size of Shell
Thickness at 4.76–22.2

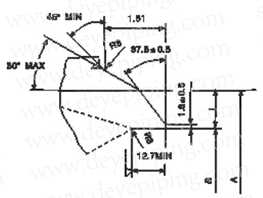

壁厚T在≥22.2焊接坡口尺寸
Weld Groove Size of Shell
Thickness ≥22.2

注：STD–标准壁厚
XS–超强壁厚
XXS–双倍超强壁厚
本附录没有加入带连接
衬环的尺寸，参照
ASME、B16.25

Note：STD–Standard Shell Thickness
XS–Super Shell Thickness
XXS–Double Super Shell Thickness
This appendix isn' t attached addtional connection.
Lining Size refers to ASME B16.25

Dasme B16.25焊接端坡口尺寸 Welding end Groove Size

公称管径直 Nominal Diameter		管号 Steel Number	阀门压力等级 Valve Pressure Class					尺寸 Size							
								A(锻造 Forging)		A(铸造 Casting)		B		t	
NPS	DN		2500	1500	900	600	300	in	mm	in	mm	in	mm	in	mm
2-1/2	65	40	x	x				2.875	73	2.96	75	2.469	63	0.203	5.15
		80	x	x	x	x						2.323	59	0.276	7
		160			x	x	x					2.215	54	0.375	9.55
		xxs					x					1.771	45	0.552	14
3	80	40	x	x				3.50	89	3.59	91	3.068	78	0.216	5.5
		80		x	x	x						2.900	74	0.300	7.6
		160			x	x	x					2.624	67	0.438	11.15
		xxs					x					2.300	58	0.600	15.25
4	100	40	x	x				4.500	114	4.62	117	4.026	102	0.237	6
		80		x	x	x						3.826	97	0.337	8.55
		120			x	x						3.624	92	0.438	11.15
		160					x					3.438	87	0.531	13.5
		xxs					x					3.152	80	0.674	17.1
5	125	40	x	x				5.563	141	5.69	144	5.047	128	0.258	6.55
		80		x	x	x						4.813	122	0.375	9.55
		120			x	x						4.563	116	0.500	12.7
		160					x					4.313	110	0.625	15.9
		xxs					x					6.063	103	0.750	19.05
6	150	40	x	x				6.625	168	6.78	172	6.065	154	0.280	7.1
		80		x	x	x						5.761	146	0.432	10.95
		120			x	x						5.501	140	0.562	14.25
		160				x	x					5.187	132	0.719	18.25
		xxs				x	x					4.897	124	0.864	21.95
8	200	40	x	x				8.625	218	8.78	223	7.981	203	0.322	8.2
		60		x	x							7.813	198	0.406	10.3
		80		x	x	x						7.625	194	0.500	12.7
		100			x	x						7.437	189	0.594	15.1
		120				x						7.187	183	0.719	18.25
		140				x						7.001	178	0.812	20.6
		xxs				x	x					6.875	175	0.875	22.25
		160				x	x					6.813	173	0.906	23
10	250	40	x	x				10.750	273	10.94	278	10.02	255	0.365	9.25
		60		x	x	x						9.750	248	0.500	12.7
		80		x	x	x						9.562	243	0.594	15.1
		100		x	x	x						9.312	237	0.719	18.25
		120				x						9.062	230	0.844	21.45
		140				x						8.750	222	1.000	25.4
		160					x					8.50	216	1.125	28.6
12	300	std	x	x				12.750	320	12.97	329	12.000	305	0.375	9.55
		40	x	x								11.938	303	0.406	10.3
		xs	x	x								11.750	298	0.500	12.7
		40		x								11.625	295	0.562	14.25
		60		x	x	x						11.374	289	0.688	17.5
		80		x	x	x						11.062	281	0.844	21.45
		120				x						10.750	273	1.000	25.4
		140				x	x					10.500	267	1.125	28.6
		160				x	x					10.126	257	1.312	33.3

钢制管法兰焊接接头Steel Pipe Flange Welding Connector

公称管径直 Nominal Diameter		管号 Steel Number	阀门压力等级 Valve Pressure Class					尺寸 Size							
								A(锻造 Forging)		A(铸造 Casting)		B		t	
NPS	DN		2500	1500	900	600	300	in	mm	in	mm	in	mm	in	mm
14	350	std	x	x				14.00	356	14.25	362	13.25	337	0.375	9.55
		40		x								13.124	333	0.438	11.15
		xs		x								13	330	0.5	12.7
		60		x	x	x						12.812	325	0.594	15.1
		80		x	x	x						12.5	318	0.75	19.05
		100			x	x						12.124	308	0.938	23.85
		120				x						11.812	300	1.094	27.8
		140				x						11.5	292	1.25	32.75
		160				x	x					11.188	284	1.406	35.7
16	400	std		x				16.00	406	16.25	416	15.25	387	0.375	9.55
		40		x								15	381	0.5	12.7
		60		x								14.688	373	0.656	16.65
		80		x	x	x						14.312	364	0.844	21.45
		100		x	x	x						13.938	354	1.031	26.2
		120				x						13.562	344	1.219	30.95
		140				x						13.124	333	1.438	36.55
		160				x	x					12.812	325	1.594	40.5
18	450	40		x				18.000	457	18.28	464	16.876	429	0.562	14.25
		60		x								16.500	419	0.75	19.05
		80		x	x							16.124	410	0.938	23.85
		100		x	x	x						15.688	398	1.156	29.35
		120			x	x	x					15.250	387	1.375	34.95
		140				x	x					14.876	378	1.562	39.65
		160				x	x					14.438	367	1.781	45.25
20	500	40		x				20.000	508	20.31	516	18.812	478	0.594	15.1
		60		x								18.376	467	0.812	20.2
		80		x	x							17.938	456	1.031	26.2
		100		x	x	x						17.438	443	1.281	32.55
		120			x	x	x					17	432	1.5	38.1
		140				x	x					16.5	419	1.75	44.5
		160				x	x					16.062	408	1.969	50
22	550	std						22.00	559	22.34	567	21.25	540	1.375	9.55
		XS		x								21	533	0.5	12.7
		60		x	x							20.25	514	0.875	22.25
		80		x	x	x						19.75	502	1.125	28.6
		100			x	x	x					19.25	489	1.375	34.95
		120				x	x					18.75	476	1.625	41.3
		140				x	x					18.25	464	1.875	47.65
		160										17.75	451	2.125	54
24	600	std						24.000	610	24.38	619	23.25	591	0.375	9.55
		XS		x								23	584	0.5	12.7
		30		x								22.876	581	0.562	14.25
		40		x								22.624	575	0.688	17.5
		60		x	x							22.062	560	0.969	24.6
		80		x	x	x						21.562	548	1.219	30.95
		100			x	x	x					20.938	532	1.531	38.9
		120				x	x					20.376	518	1.812	46
		140				x	x					19.876	505	2.062	52.35
		160										19.312	491	2.344	59.55
26	650	10						26.000	660	24.38	619	25.376	645	0.312	7.90
		20										25.000	635	1.50	12.70
28	700	10						28.000	711	28.38	721	27.376	965	0.312	7.90
		20										27.000	686	1.50	12.70
		30										26.750	679	0.625	15.90
30	750	10						30.000	762	0.338	772	29.376	746	0.312	7.90
		20										29.000	737	1.50	12.70
		30										28.750	730	0.625	15.90
32	800	10						32.000	813	32.50	825	31.413	797	0.312	7.90
		20										31.084	787	1.50	12.70
		30										32.865	781	0.625	15.90
		40										32.755	778	0.688	17.50
34	850	10						34.000	864	34.50	876	33.376	848	0.312	7.90
		20										33.000	838	1.50	12.70
		30										32.750	832	0.625	15.90
		40										32.624	829	0.688	17.50
36	900	10						36.000	914	36.50	927	35.376	899	0.312	7.90
		20										35.000	889	1.50	12.70
		30										34.750	883	0.625	15.90
		40										34.500	876	0.750	19.05

阀座温度额定值 Seat Temperature Rating

阀座材料 Seat Material	温度等级 Temperature Grade ℃	F°
丁腈橡胶Nitrile Rubber	-12~82	+10~180
耐磨丁腈 Wear Nitrile	-12~84	+10~180
氧丁橡胶 Oxygen-Butadiene Rubber	-7~93	20~200
乙丙橡胶Ethylene-Propylene Rubber(2"-16")	-35~135	-30~275
乙丙橡胶Ethylene-Propylene Rubber(18"以上) (above18")	-35~110	-30~225
食品乙丙橡胶 Food Grade Ethylene-Propylene Rubber	-35~110	-30~225
海波伦 Hypalon	-32~135	0~275
氟橡胶 Fluorined Rubber	-12~135	10~275
高温氟橡胶 High Temperature Fluorined Rubber	-12~382	10~400
聚四氟丁腈Poly Tetrafluorine(125psi2"~12")	4~121	40~250
Over Buna-N(75si,2"-12")	4~135	40~275

说明：阀座可承受更低温度而不至于损坏。然而，橡胶会硬且扭矩增大。有些流体介质可能会对公布温度进一步限制或大大减少阀寿命。
请注意：高温氟橡胶在高于275℃的温度时压力承受会降低。
Instruction: The valve seat can afford lower temperature without damaging, However, rubber will gradually harden and torque increases. Some flow media has a limited temperature range, and the valves' life might be greatly reduced.
Note: High temperature fluorine rubber will reduce pressure affording ability at temperature above 275℃

压力温度额定值ASNE B16.34最大允许非冲击压力值(MPA)(标准级) PN2.0MPa CLASS150
Pressure Temperature Rating ASME B16.34 Max Allowable Non-impact Pressure(MPA)(Standard Level)

工作温度℃ Working Temperature	A216-WCB A105	A217-WC6 A182-F11	A217-WC5 A182-F22	A217-WC5 A182-F5	A352-LCB	A352-LCB	A315-CF8 A315-CF3	A315-CF8M A315-CF3M	A182-F304L A612-F316L	Monel
-29~38	1.96	2.00	2.00	2.00	2.00	1.84	1.90	1.90	1.59	1.59
50	1.92	1.92	1.92	1.92	1.90	1.81	1.84	1.84	1.53	1.54
100	1.77	1.77	1.77	1.77	0.77	1.77	1.57	1.57	1.32	1.38
150	1.58	1.58	1.58	1.58	1.58	1.58	1.39	1.39	1.20	1.39
200	1.40	1.40	1.40	1.40	1.40	1.40	1.26	1.26	1.10	1.26
250	1.21	1.21	1.21	1.21	1.21	1.21	1.17	1.17	1.02	1.17
300	1.02	1.02	1.02	1.02	1.02	1.02	1.02	1.02	0.97	1.02
350	0.84	0.84	0.84	0.84	0.84	0.84	0.84	0.84	0.84	0.84
375	0.74	0.74	0.74	0.74	0.74	0.74	0.74	0.74	0.74	0.74
400	0.65	0.65	0.65	0.65	0.65	0.65	0.65	0.65	0.65	0.65
425	0.56	0.56	0.56	0.56	0.56	0.56	0.56	0.56	0.56	0.56
450	0.47②	0.47	0.47	0.47	0.47	0.47	0.47	0.47	0.47	–
475	0.37	0.37	0.37	0.37	0.37	0.37	0.37	0.37	–	–
500	0.28	0.28	0.28	0.28	0.28	0.28	0.28	0.28	–	–
525	0.19	0.19	0.19	0.19	0.19	0.19	0.19	0.19	–	–
540	–	–	–	–	–	–	–	–	–	–
550	–	0.13②	0.13②	0.13②	–	–	0.13②	0.13②	–	–
575	–	0.13②	0.13②	0.13②	–	–	0.13②	0.13②	–	–
625	–	0.13	0.13	0.13	–	–	0.13②	0.13②	–	–
650	–	–	–	–	–	–	0.13②	0.13②	–	–
675	–	–	–	–	–	–	0.13②	0.13②	–	–
700	–	–	–	–	–	–	0.13②	0.13②	–	–
725	–	–	–	–	–	–	0.13②	0.13②	–	–
750	–	–	–	–	–	–	0.13②	0.13②	–	–
775	–	–	–	–	–	–	0.13②	0.13②	–	–
800	–	–	–	–	–	–	0.13②	0.13②	–	–
壳体液体静压试验 Shell Test with Liquid Static Pressure	2.9	3.0				2.8	3.0		2.85	
密封试验 Seal Test 液压气压 Hydraulic Pressure and Air Pressure	2.1	2.2				2.0	2.0		1.7	
	0.6									

注：1、允许在450使用，但不推荐长时间使用温度超过425。
2、超过540只能使用对焊端连接，而且不能采用法兰连接。
3、低温材料在低温状态下的工作压力不能超过常温的额定压力值。

Note: 1.Valves can be used at 450℃,but it is not reccommended that using it above 425℃ in a long time.
2.Only Use Butt Welding Connection, but not Flange over 540℃
3.Low temp. materials'working pressure in low temp. condition can't exceed the nominal temperature rating.

PN5.0MPa CLASS300

工作温度℃ Working Temperature	A216-WCB A105	A217-WC6 A182-F11	A217-WC5 A182-F22	A217-WC5 A182-F5	A352-LCB	A352-LCB	A315-CF8 A315-CF3	A315-CF8M A315-CF3M	A182-F304L A612-F316L	Monel
-29~38	5.11	5.17	5.17	5.17	5.17	4.79	4.96	4.96	4.14	4.14
50	5.01	5.11	5.12	5.17	5.17	4.73	4.78	4.78	4.00	4.03
100	4.04	4.88	4.90	5.15	5.15	4.51	4.09	4.09	3.45	3.61
150	4.52	4.64	4.64	5.02	5.02	4.40	3.63	3.85	3.12	3.96
200	4.38	4.55	4.55	4.88	4.88	4.27	3.28	3.77	2.87	3.30
250	4.07	4.45	4.45	4.63	4.63	4.06	3.05	3.34	2.67	3.28
300	3.87	4.24	4.24	4.24	4.24	3.77	2.91	3.63	2.52	3.22
350	3.70	4.02	4.02	4.06	4.06	3.60	2.81	3.28	2.40	3.17
375	3.65	3.88	3.88	3.88	3.88	3.53	2.76	3.05	2.36	–
400	3.45	3.66	3.66	3.06	3.45	3.24	2.75	2.91	2.32	–
425	2.88	3.51	3.51	3.45	2.88	2.73	2.72	2.87	2.27	–
450	2.00	3.38	3.38	3.09	2.00	1.98	2.69	2.81	2.23	–
475	1.35	3.17	3.17	2.59	1.35	1.35	2.66	2.74	–	–
500	0.88	2.78	2.78	2.03	0.88	0.88	2.61	2.68	–	–
525	0.52	2.03	2.19	1.54	0.52	0.52	2.39	2.58	–	–
540	–	–	–	–	–	–	–	–	–	–
550	–	12.8	1.64	1.17	–	–	2.18	2.50	–	–
575	–	0.85	1.17	0.88	–	–	2.01	2.41	–	–
625	–	0.34	0.66	0.45	–	–	1.31	1.83	–	–
650	–	–	–	–	–	–	1.05	1.14	–	–
675	–	–	–	–	–	–	0.78	1.26	–	–
700	–	–	–	–	–	–	0.60	0.99	–	–
725	–	–	–	–	–	–	0.46	0.77	–	–
750	–	–	–	–	–	–	0.37	0.59	–	–
775	–	–	–	–	–	–	0.28	0.46	–	–
800	–	–	–	–	–	–	0.21	0.35	–	–
壳体液体静压试验 Shell Test with Liquid Static Pressure	7.6	7.7				7.2	7.4		6.2	
密封试验 Seal Test 液压气压 Hydraulic Pressure and Air Pressure	5.6	5.7				5.3	5.4		4.5	
	0.6									

蝶阀压力-温度额定值
Butterfly Valve Pressure-Temperature Rating

PN6.8MPa CLASS400

工作温度℃ Working Temperature	A216-WCB A105	A217-WC6 A182-F11	A217-WC5 A182-F22	A217-WC5 A182-F5	A217-WC12 A182-F9	A352-LCB	A352-LCB	A315-CF8 A315-CF3	A315-CF8M A315-CF3M	A182-F304L A812-F316L	Monel
-29~38	6.81	6.90	6.90	6.90	6.90	6.90	6.38	6.62	6.62	5.51	5.52
50	6.68	6.82	6.82	6.90	6.90	6.90	6.31	6.38	6.42	5.33	5.37
100	6.18	6.50	6.54	6.87	6.87	6.87	6.01	5.54	5.63	4.60	4.81
150	6.03	6.18	6.22	6.69	6.69	6.69	5.86	4.84	6.62	4.16	4.47
200	5.84	6.06	5.98	6.50	6.50	6.50	5.69	4.37	6.42	3.83	4.40
250	5.56	5.93	5.90	6.18	6.18	6.18	5.41	4.07	5.63	3.56	4.37
300	5.16	5.66	5.66	5.66	5.66	5.66	5.03	3.87	4.22	3.37	4.37
350	4.93	5.36	5.36	5.36	5.36	5.36	4.80	3.74	4.06	3.21	4.37
375	4.86	5.17	5.17	5.17	5.17	5.17	4.71	3.70	3.96	3.15	4.37
400	4.60	4.88	4.88	4.88	4.88	4.60	4.32	3.66	3.88	3.09	4.30
425	3.83	4.88	4.88	4.60	4.68	3.83	3.64	3.62	3.82	3.03	4.22
450	2.68	4.51	4.51	4.12	4.51	2.68	2.64	3.58	3.74	2.97	-
475	1.81	4.22	4.22	3.45	4.22	1.81	1.81	3.54	3.65	-	-
500	1.17	3.71	3.71	2.70	3.67	1.17	1.17	3.47	3.58	-	-
525	0.69	2.70	2.92	2.06	3.01	0.69	0.69	3.18	3.44	-	-
540	0.43	-	-	-	-	0.43	0.43	-	-	-	-
550	-	1.70	2.18	1.58	2.26	-	-	2.91	3.33	-	-
575	-	1.13	1.56	1.17	1.50	-	-	2.68	3.21	-	-
625	-	0.78	1.02	0.87	0.96	-	-	2.23	2.86	-	-
650	-	0.45	0.86	0.60	0.66	-	-	1.74	2.43	-	-
	-	0.31	0.49	0.40	0.46	-	-	1.40	1.88	-	-
壳体液体静压试验 Shell Test with Liquid Static Pressure	10.2	10.35					9.6	9.6		8.28	8.28
密封试验 Seal Test 液压气压 Hydraulic Pressure and Air Pressure	7.50	7.6					7.0	7.3		6.1	6.1
	0.6										

PN10.0MPa CLASS600

工作温度℃ Working Temperature	A216-WCB A105	A217-WC6 A182-F11	A217-WC5 A182-F22	A217-WC5 A182-F5	A217-WC12 A182-F9	A352-LCB	A352-LCB	A315-CF8 A315-CF3	A315-CF8M A315-CF3M	A182-F304L A812-F316L	Monel
-29~38	10.21	10.34	10.34	10.34	10.34	10.34	9.57	9.92	9.93	8.27	8.28
50	10.02	10.23	10.23	10.34	10.34	10.34	9.46	9.57	9.63	7.99	8.06
100	9.28	9.75	9.75	10.31	10.31	10.31	9.02	8.18	8.44	6.90	7.21
150	9.05	9.27	9.27	10.04	10.04	10.04	8.79	7.27	7.70	6.25	6.71
200	8.76	9.10	9.10	9.76	9.76	9.76	8.54	6.55	7.13	5.74	6.60
250	8.34	8.89	8.89	9.27	9.27	9.27	8.12	6.11	6.68	5.34	6.56
300	7.74	8.49	8.49	8.49	8.46	8.49	7.54	5.81	6.63	5.05	6.55
350	7.39	8.05	8.05	8.05	8.49	8.05	7.19	5.61	6.08	4.81	6.55
375	7.29	7.76	7.76	7.76	6.05	7.76	7.06	5.55	5.94	4.72	6.55
400	6.90	7.32	7.32	7.32	7.76	6.90	6.48	5.49	5.82	4.63	6.45
425	5.75	7.02	7.02	6.90	7.32	5.75	5.46	5.43	5.72	4.54	6.33
450	4.01	6.67	6.67	6.18	7.02	4.01	3.96	5.37	5.62	4.45	-
475	2.71	6.33	6.33	5.18	6.76	2.71	2.71	5.31	5.47	-	-
500	1.76	5.56	5.56	4.05	6.33	1.76	1.76	5.21	5.37	-	-
525	1.04	4.05	4.05	3.08	4.52	1.04	1.04	4.78	5.16	-	-
540	-	-	-	-	-	0.65	0.65	-	-	-	-
550	-	2.55	2.55	2.34	3.40	-	-	4.36	4.99	-	-
575	-	1.70	1.70	1.76	2.25	-	-	4.01	4.82	-	-
600	-	1.12	1.13	1.31	1.44	-	-	3.34	4.29	-	-
625	-	0.68	0.68	0.90	0.99	-	-	2.62	3.65	-	-
650	-	0.46	0.46	0.60	0.70	-	-	2.10	2.82	-	-
675	-	-	-	-	-	-	-	1.55	2.53	-	-
700	-	-	-	-	-	-	-	1.20	1.99	-	-
725	-	-	-	-	-	-	-	0.93	1.54	-	-
750	-	-	-	-	-	-	-	0.73	1.00	-	-
775	-	-	-	-	-	-	-	0.56	0.91	-	-
800	-	-	-	-	-	-	-	0.41	0.70	-	-
壳体液体静压试验 Shell Test with Liquid Static Pressure	10.2	10.35					9.6	9.6		8.28	8.28
密封试验 Seal Test 液压气压 Hydraulic Pressure and Air Pressure	7.5	7.5					7.0	7.3		6.1	6.1
	0.6										

壳体材料的化学成分和力学性能
Shell Material s Chemical Components and Mechanical Properties

化学成分和力学性能 Chemical Components and Mechanical Performance

材料 Material	碳钢 Carbon Steel				合金钢 Alloy Steel				不锈钢 Stainless Steel		
	ASTM A216 WCB	ASTM A216 WCC	ASTM A352 LCB	ASTM A352 LCC	ASTM A217 WC6	ASTM A217 WC9	ASTM A217 C5	ASTM A217 C12	ASTM A351 CF8	ASTM A351 CF8M	ASTM A351 CF3
碳 Carbon	0.3	0.25	0.3	0.25	0.05-0.20	0.05-0.18	0.2	0.2	0.08	0.08	0.03
锰 Mn	1	1.2	1	1.2	0.50-0.8	0.40-0.70	0.40-0.70	0.40-0.70	1.5	1.5	1.5
磷 P	0.04	0.04	0.04	0.04	0.05	0.05	0.05	0.05	0.04	0.04	0.04
硫 Sulfur	0.045	0.045	0.045	0.045	0.06	0.06	0.06	0.06	0.04	0.04	0.04
硅 Silicon	0.6	0.6	0.6	0.6	0.6	0.6	0.75	1	2	1.5	2
镍 Ni	0.5	0.5	0.5	0.5	-	-	-	-	8.00-11.0	9.00-12.0	8.00-12.0
铬 Cr	0.5	0.5	0.5	0.5	1.00-1.50	2.00-2.75	4.00-6.50	8.00-10.0	18.00-21.0	18.00-21.00	18.00-21.0
钼 Mo	0.2	0.2	0.2	0.2	0.45-0.65	0.90-1.20	0.45-0..65	0.90-1.20	0.5	2.00-3.00	0.5
铜 Copper	0.3	0.3	0.3	0.3	0.5	0.5	0.5	0.5	-	-	-
铌 NB	-	-	-	-	-	-	-	-	-	-	-
钒 V	0.03	0.03	0.03	0.03	-	-	-	-	-	-	-
最小抗拉强度 Min Tensile Strength	70,000-95,000	7,000-	65.00	70,000-95,000	70,000	70,000	90,000-15,000	90,000-15,000	70,000	70,000	70,000
最小屈服强度 Min Yield Strength	36,000	40,000	35,000	40,000	40,000	40,000	60.000	60.000	30,000	30,000	30,000
最小延伸率 Min Elongation	22	22	24	22	20	20	18	18	35	30	30
最小伸缩 Min Extend Rating	35	35	35	35	35	35	35	35	-	-	-
最大(HB) The maximum (HB)	185	185	190	200	200	200	237	237	-	-	-

安装使用维修
Installation, Use and Maintenance

运输与贮存 Transportation and Storage

1、蝶阀在搬运过程中，应对两密封面加以保护，以防止碰伤。
2、蝶阀应在防雨、防尘、干燥处存放，使蝶板处于开启5°-10°状态，并加以覆盖，防止杂物进入密封面。

1.Butterfly valves' double sealing surfaces should be protected to prevent damage during transportation.
2.Butterfly valves should be stored at dry,rain-proof and dust-proof places with the disc opening 5°-10°.The valves should be covered to prevent anything entering the sealing surface.

安装使用注意事项 Notice for Installation and Use

1、安装前应核对蝶阀规格、压力、温度、耐腐性是否满足使用要求。应检查各部零件是否损坏或松动。
2、本蝶阀可安装在任意角度的管道上，应关闭安装为宜;焊接管道法兰时应将阀门密封口用板挡住以防止颗粒、杂物挫伤密封面。焊后取下阀门，对阀门密封面及管道内腔进行清洁，然后再安装固定阀门。
3、安装时请注意阀门关闭状态承压方向，普通管道阀门正向安装，泵前阀门反向安装。
4、安装前应将密封面(两端密封面、碟板密封面、阀座密封面)彻底擦干净，去掉灰尘和污物。
5、安装前应空试蝶阀，启闭应灵活，启闭位置与指针指示位置符合。
6、手动操作顺时针为关，逆时针为开，指针指示到位后不准再加力启闭阀门。
7、阀门做压力试验时，不准用单法兰进行安装试压，必须采用双法兰安装试压。其试验压力应符合GB/T 13927标准规定。
8、紧固螺栓时应对称交替进行紧固，不准依次单独紧固。
9、限位螺钉出厂前，已经调好，不准轻易调整。若配置驱动装置为电动、气动时请阅配套驱动装置说明书。
10、电动蝶阀出厂时已将控制机构的启闭行程调好，为防止电源接通时方向搞错，用户在第一次接通电源前要先手动开启至半开位置，再按点开关，检查指示盘方向与阀门开启方向一致即可。
11、发现阀门启闭失常应查明原因进行修理和排除，防止用加力方法开关阀门，造成阀门的损伤。
12、阀门故障实在无法排除，请通知我们将为您做好产品安装使用售后服务。

1. It is confirmed that whether butterfly valves' specification,pressure, temperature and corrosion resistance satisfy the using requirements, and whether parts are damaged or loose.
2.The butterfly valves can be installed at the pipeline with any angle, and should be installed in closing condition, when welding the pipe flange,valve sealing ends should be blocked with boards to prevent the particles, debris damaging the sealing surface. After welding, take down the valve and clean the valve sealing surface and pipeline inside, later install and fix the valve.
3.During installation, pay attention to the direction of the valve affording.Ordinary pipeline valves are incet installed, pump valves are outlet installed as.
4.Before installation, wipe off the sealing surfaces(at both ends,disc and seat), clean the dust and obstacles.
5.Before installation, the valve should be flexible to open and close with the air condition. The position of opening and closing is fit for the indicator position.
6.During manual operation, it should be clockwise to close and anticlockwise to open. Do not force to open and close after the valve indication in the right place.
7.During the valve pressure testing, it is forbidden that using single flange, it is adopted that double flange as . The pressure test should fits the standard of GB/T13927.
8.Bolts should be fastened alternately and symmetriacal, not individually.
9.The limit screw have a good tune before leaving factory, so adjusting casually is forbidden. If the driver is pneumatic or electric, plz read the instruction of the driver carefully.
10.Eletric butterfly valve has a good tune in opening and closing stroke of the control mechanism. When customer open the valve first time, open the valve as half-open position with manual operation,and point the switch, and check the direction of valve is in accordance with the indicator.
11.If the valve was in an abnormal opening and closing situation, check the reason and maitain it, avoiding the damage from forcing opening and closing the valve.
12.If the hitch couldn't be solved by yourself, plz contact us to arrange the after-sales service.

可能发生的故障及消防方法 The Possible Fault and Fire

可能发生的故障 Probable Fault	原因 Reason	消除方法 Elimination Method
密封泄漏 Seal Leakage	1、蝶板、密封圈夹有杂物 2、蝶板、密封圈关闭位置略合不正 3、出口侧配装法兰螺栓受力不均或未压紧 4、试压方向未按箭头方向要求 1. There is debris on the disc and seal ring. 2. The closing position of disc and seal ring is not correct. 3. Fitting pipe flange at external position is compressed unevenly and untightly 4. Direction of testing pressure doesn't according to the arrow requirements	1、消除杂质，清洗阀门内腔 2、调正蜗轮或电动执行器等执行机构的调节螺钉，以达到阀门关闭位置正确 3、检查配装法兰平面及螺栓压紧力，应均匀压紧 4、按箭头密封方向进行加压 1.Clean the valve cavity and eliminate the debris. 2.Adjust the screws of wormgear and electric actuator or other driving devices to correct the valve closing position. 3.Fitting flange at external position should be compressed evenly and tightly. 4.Direction of testing pressure should depend on the arrow of seal.
阀门两端面泄漏 Valve Leakage of Both Ends	1、两侧密封垫片失效 2、管法兰压紧力不均未压紧 3、密封圈上、下密封圈垫片失效 1. Sealing gaskets of both ends are invalid. 2. Pipe flange is compressed unevenly and untightly. 3. Gaskets on the up and bottom of seal ring are invalid.	1、更换密封垫片 2、压紧法兰螺栓(均匀用力) 3、卸下阀门的压板圈，更换密封圈失效垫片 1.Replacing sealing gaskets 2.Compressing flange bolts (uniform force) 3.Removing the plate ring of valve and replacing the invalid gasket

全球营销
Global Marketing

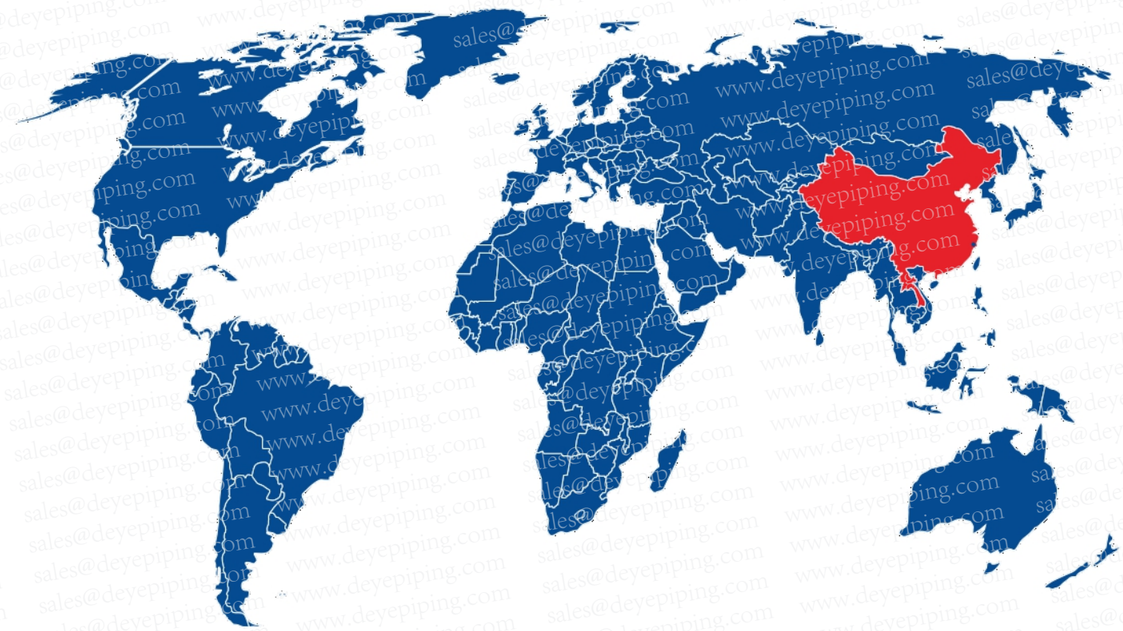

公司业绩
Company Performance

专业的精神、创新的理念、务实的作风、科研的实力、精良的装备，缔造了朗格的全新形象。

The professional spirit,innovative concept,pragmatic working style,scientific researching strength, and excellent equipments, all these factors create a new image of Langge.

产品广泛应用于建筑、市政、给排水、暖通、消防、电力、冶金、石化、化工、燃气等行业，朗格的产品都展示着它永恒的魅力，无论是产品外形设计，还是内在功能，都体现着科技与人为本的理念。

The products are widely used in many industries such as construction,municipal working,HVAC,fire protection,electric power,metallurgy,petrifaction,chemical and gas,etc. etc.Langge's products show their external charming, whether the design of appearance,or the internal function,indicate the concept of technology and people oriented.